Optionals for industrial vacuum solutions

Nilfisk®

The solution for turning advantages into benefits

The right optional can expand the potential of your vacuum cleaner

The catalogue of original Nilfisk optionals, in continuous evolution, contains all available products for your vacuum cleaner. You can expand the potential of your vacuum cleaner and use it for various jobs to meet specific requirements.

The catalogue is divided into sections, making it easy to read and to find just the right optional for the job. The explanatory designs give a clear idea of the technical-operative function of each single tool, so you can select the appropriate solution.
The wide variety of optionals allows the best results to be obtained in every operational context, with immediate advantages and benefits in terms of savings in time and resources.

Today, turning advantages into benefits is just a step away!

Table of contents

Adaptors 2
Cap with mini-separator 3
Cap for mini-separator 4
Removable separator 5
Grill and Depressor 6
Grill and Valve 8
Container lifting systems 9
Machine lifting systems 10
Liquid automatic stop 11
Solid automatic stop 13
Liquid mechanical stop 14
Electric filter shaker 15
Cartridge kit 16
Upstream absolute filter kit (HEPA H14) 18
Downstream absolute filter kit (HEPA H14, ULPA 15) 21
Activated carbon filters 23
Diffuser kit 24
Tilting discharge device 26
Longopac® 28
Vacuum arm kit 29
Paper bag inlet 30
Double intake fitting 31
Shavings basket 32
Disposal system kit 33
Slush filter kit 35
Filtering chambers 36

Adaptors

Ideal when you have to use a motorhead on a 200L (D 560) container. The kit allows to adapt a D460 singlephase motorhead to a D560 container. Inserting a filter allows to collect material into the container.

ADAPTOR	Ø mm	Ø Connections mm	PAINTED	STAINLESS STEEL	NOTE	CODE
	560-460	70	Grey RAL 7001			Z7 22183
	Note - Add the star filter for dust, and bag filter for solids.					

EXAMPLE

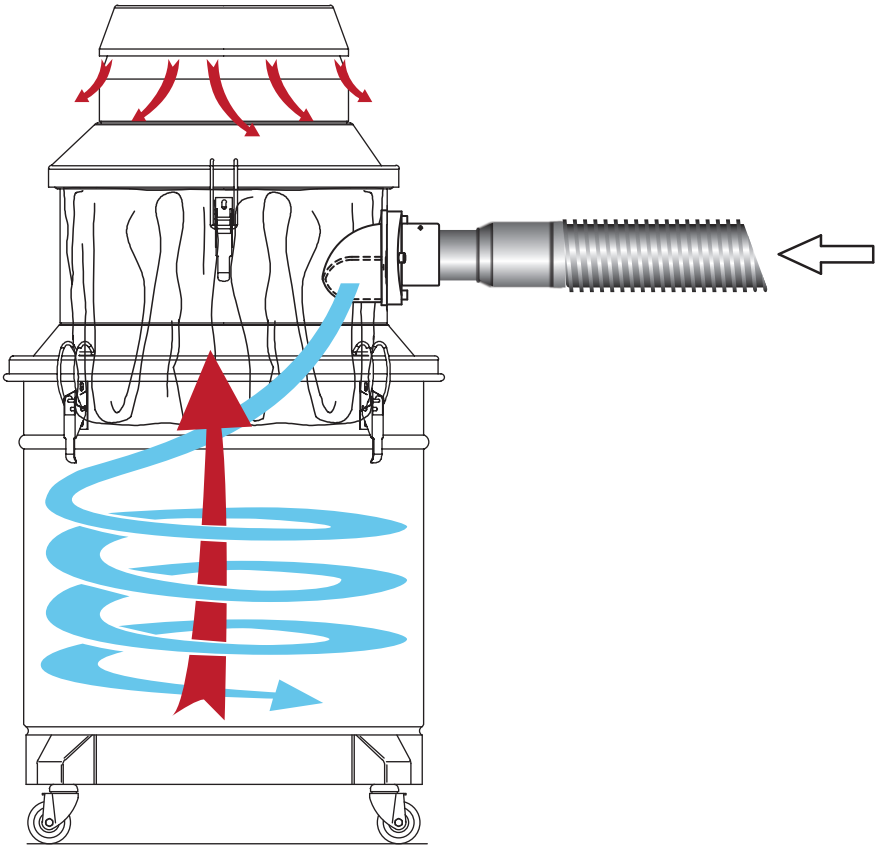

Cap with mini-separator

Ideal for vacuuming light or dusty material directly into the container. The system has to be placed on the container/hopper and creates a cyclonic effect which assists in depositing the material on the bottom.

CAP WITH MINI-SEPARATOR	Ø mm	Ø CONNECTIONS mm	PAINTED	STAINLESS STEEL	NOTE	CODE
	460	100	Grey RAL 7001			Z7 22185
	560	100	Grey RAL 7001			Z7 22181
				•		Z7 22284

EXAMPLE

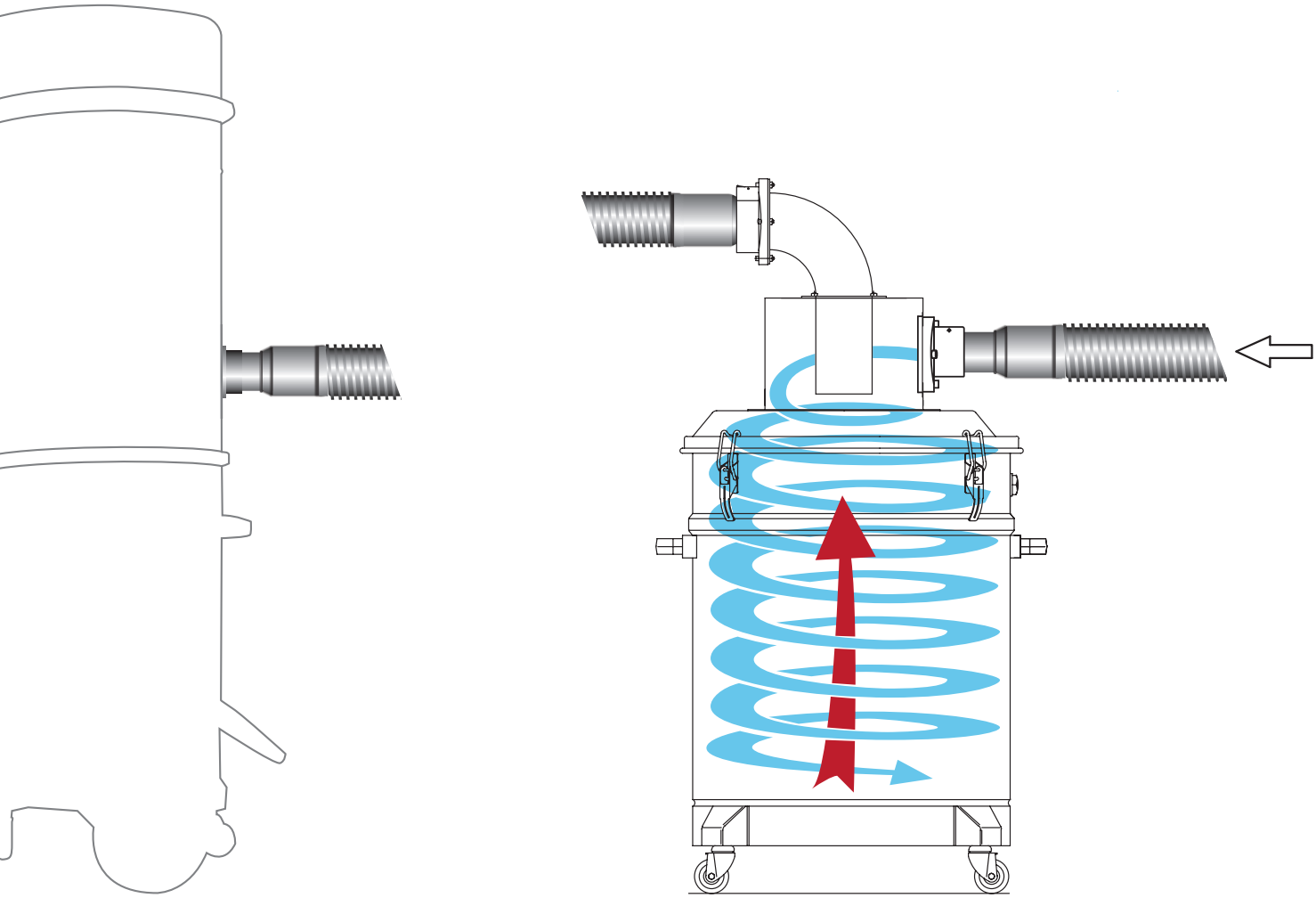

Cap for separators

Ideal for vacuuming solids, non-dusty materials into the container. It has to be placed on the container and assists the material in depositing on the bottom.

CAP FOR SEPARATORS	Ø mm	Ø CONNECTIONS mm	PAINTED	STAINLESS STEEL	NOTE	CODE
	460	50	Grey RAL 7001			Z7 22293
	560	70	Grey RAL 7001			Z7 22159
				•		Z7 22265

EXAMPLE

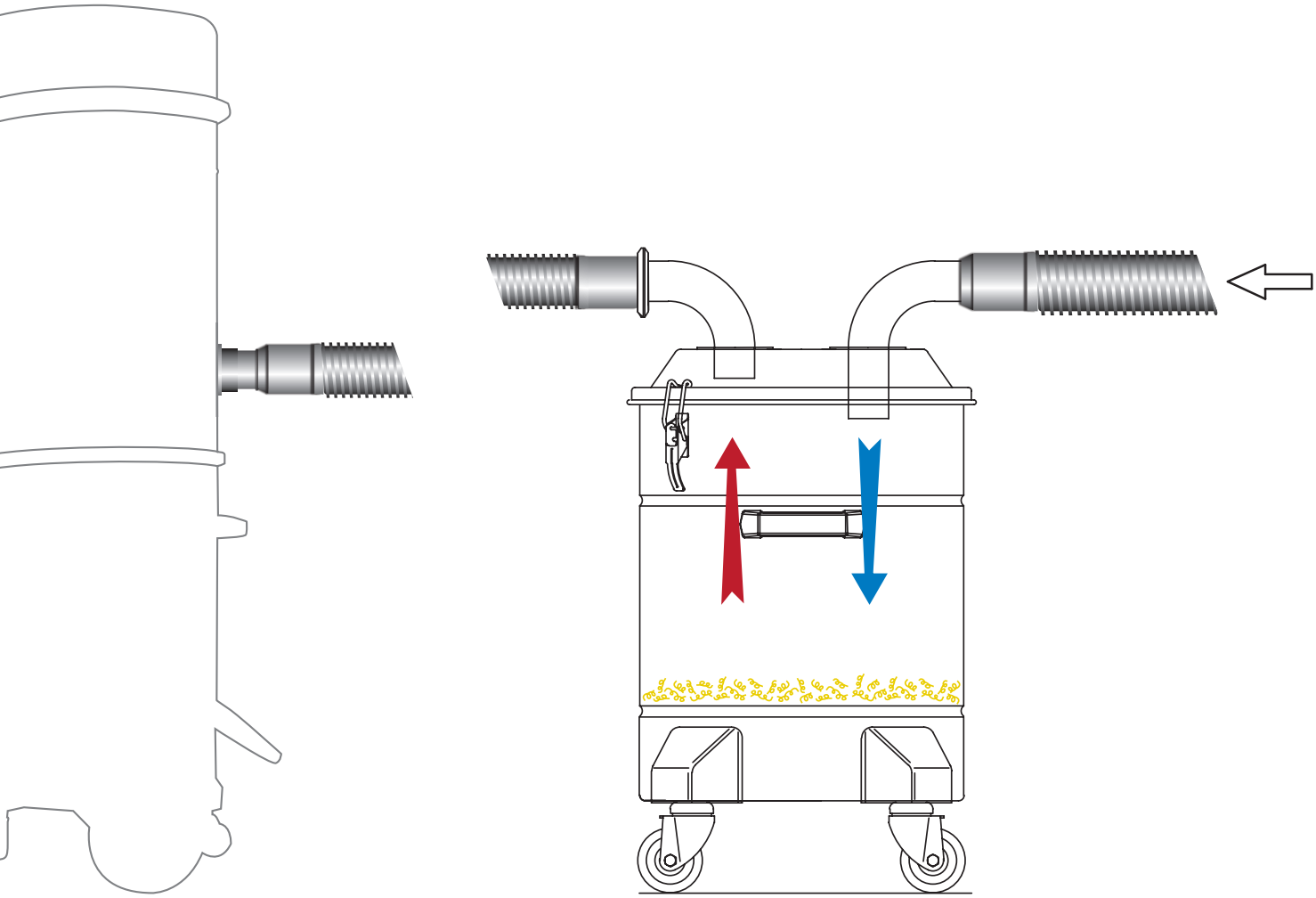

Removable separator

It protects the primary filter from becoming in direct contact with incoming liquids or sharp objects. It's not to be used with predominantly `dusty' materials.

SEPARATOR + BRACKETS	Ø mm	ZINC-PLATED IRON	STAINLESS STEEL	NOTE	CODE
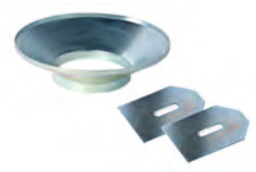	460	•			Z5 60109
			•		Z5 60116
	560	•			Z5 60110
			•		Z5 60111

SEPARATOR FOR VAPOURS	Ø mm	ZINC-PLATED IRON	STAINLESS STEEL	NOTE	CODE
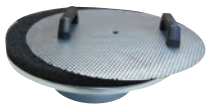	460	•		Suitable in case of oil fog	Z5 60268
	Note - If you need to order this separator, please note that the filter or the cartridges could touch the upper grid of the cyclone. To avoid this, please order extension: code 4056000634				

EXAMPLE

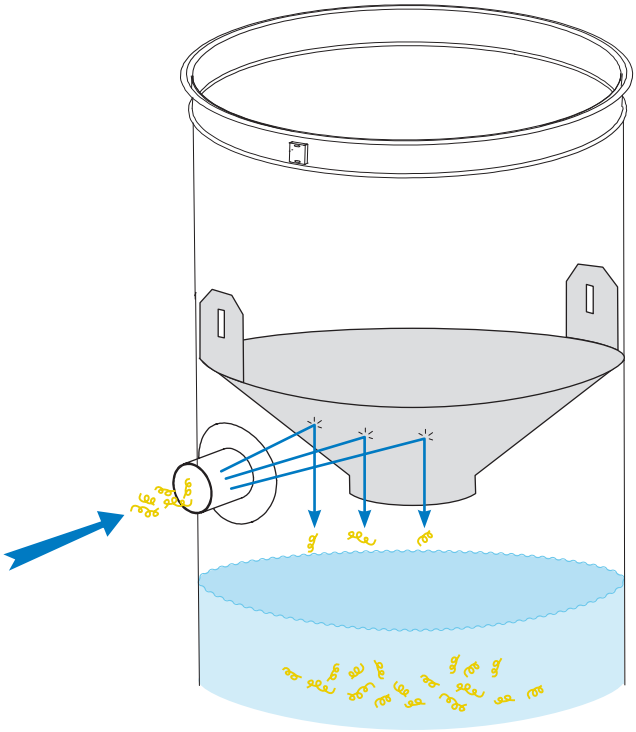

Standard separator

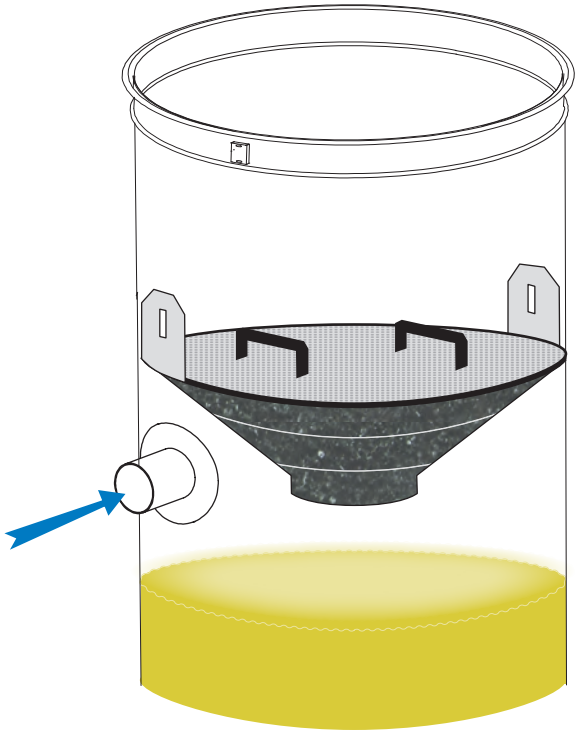

Separator for Vapour

Grill and depressor

Ideal for collection of the recovered materials into a plastic bag. The system with a depressor tube stops the bag from being sucked upwards when the vacuum cleaner is in operation.

GRILL AND DEPRESSOR	Ø mm	ZINC-PLATED IRON	STAINLESS STEEL	NOTE	CODE
	360	•		SEE EXAMPLE 1	Z5 60040
			•		Z5 60041

GRILL AND DEPRESSOR	Ø mm	ZINC-PLATED IRON	STAINLESS STEEL	NOTE	CODE
	460	•		With Ø 19 hose mainly used with containers of L100/L175 SEE EXAMPLE 2	Z5 60343
			•		Z5 60344
	560	•			Z5 60039
			•		Z5 60043

GRILL AND DEPRESSOR	Ø mm	ZINC-PLATED IRON	STAINLESS STEEL	NOTE	CODE
	460	•		With Ø 19 hose. Used with L50 containers and VHW4xx vacs SEE EXAMPLE 3	4056000535

POLYETHYLENE BAGS	Ø mm	NOTE	CODE
	360 - 460	Dim. 80x60 - Thick. 100 Maximum 50Lt. capacity	Z8 40099
	460 - 560	Dim. 100x100 - Thick. 120 Maximum 175Lt. capacity	Z8 40100

ANTISTATIC POLYETHYLENE BAGS	Ø mm	NOTE	CODE
	360	Dim. 80x60 - Thick. 150 Maximum 50 lt container	4084001110
	460 - 560	Dim. 100x100 - Thick. 150 Maximum 175 lt container	Z8 40828

EXAMPLE 1

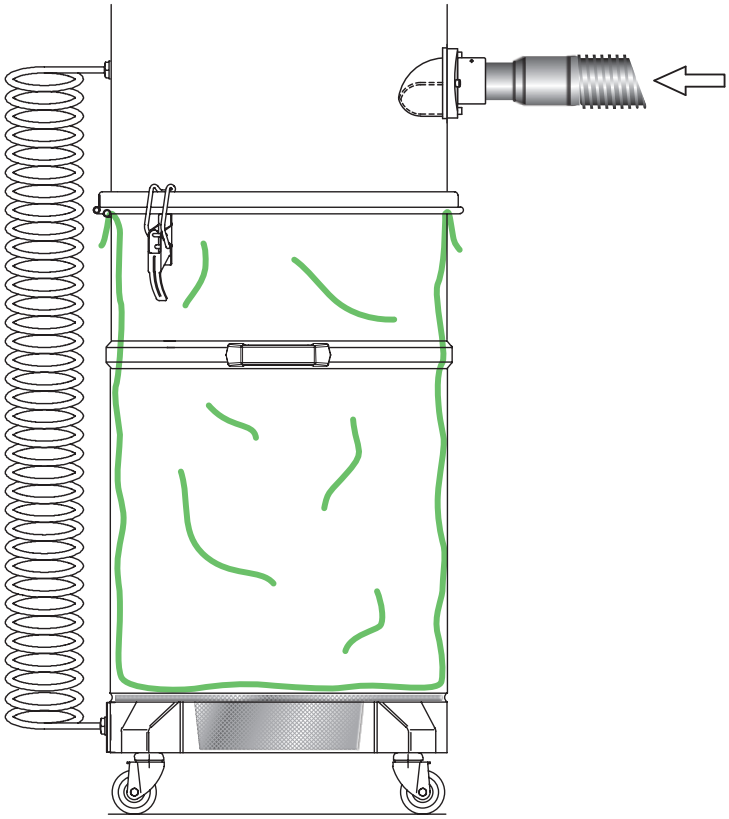

EXAMPLE 2

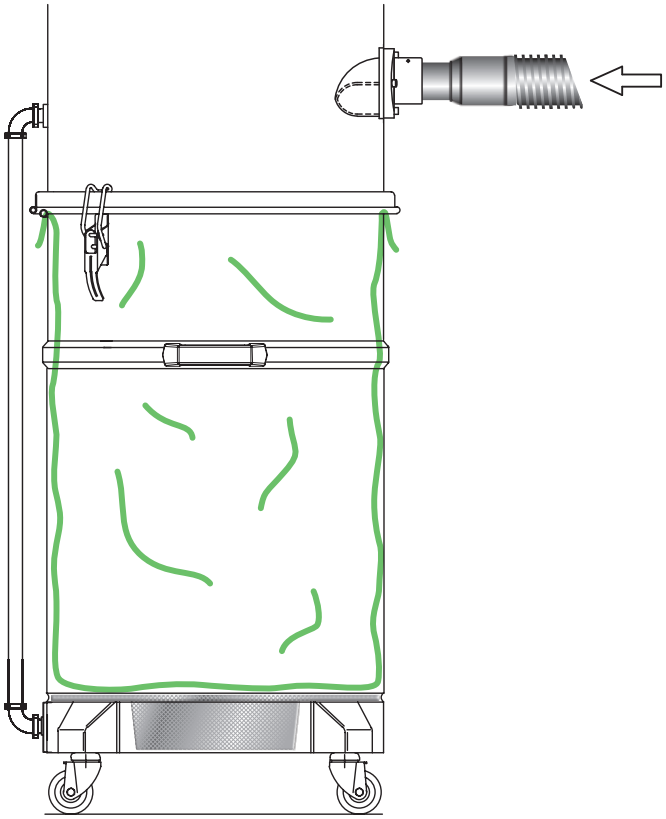

EXAMPLE 3

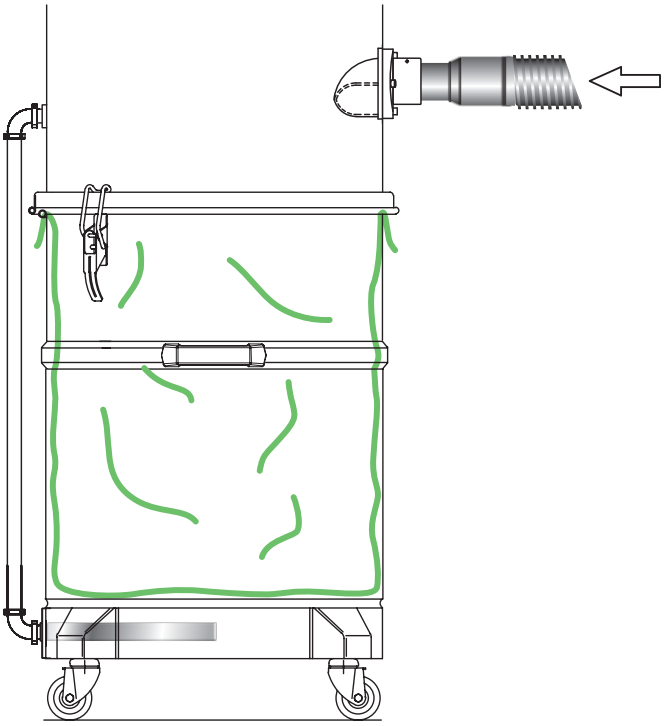

Grill and valve

For separating solids from liquids inside the container. The solid material deposits on the grill which is located at the base of the container, whilst the liquids can be drained via the manual valve fitted to the bottom of the container.

GRILL AND VALVE	Ø mm	ZINC-PLATED IRON	STAINLESS STEEL	NOTE	CODE
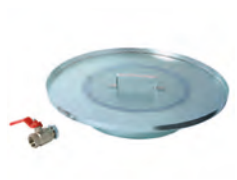	460	•			Z5 60034
			•		Z5 60036
	560	•			Z5 60035
			•		Z5 60037
	Note - Those kits cannot be mounted on the new white line 460 platform.				

EXAMPLE

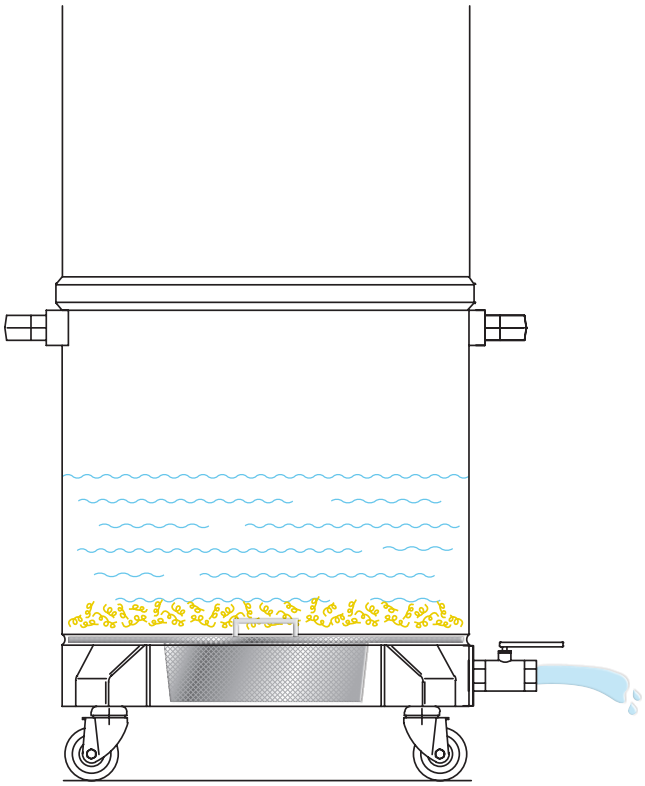

Container lifting systems

Assists in the transportation and emptying of the container with use of a forklift, or hook and chain. The clamp can remain fitted upon the container. The bracket is used solely to move and empty the container.

CLAMP AND BRACKET	Ø mm	ZINC-PLATED IRON	STAINLESS STEEL	NOTE	CODE
	460	•		Bracket for 100 L container	Z5 36074
	560	•		Bracket for 175 L container	Z5 36076
	460	•		Clamp for 100 L container	Z5 36073
	560	•		Clamp for 175 L container	Z5 36075
	Note - The system, as indicated on the labels, is suitable for weights up to 200 Kg.				

LIFTING BRACKET	Ø mm	ZINC-PLATED IRON	STAINLESS STEEL	NOTE	CODE
	460	•		System for CTS - CTT models and containers with release handle	4056000394
	Note - The system, as indicated on the labels, is suitable for weights up to 100 Kg.				

EXAMPLE

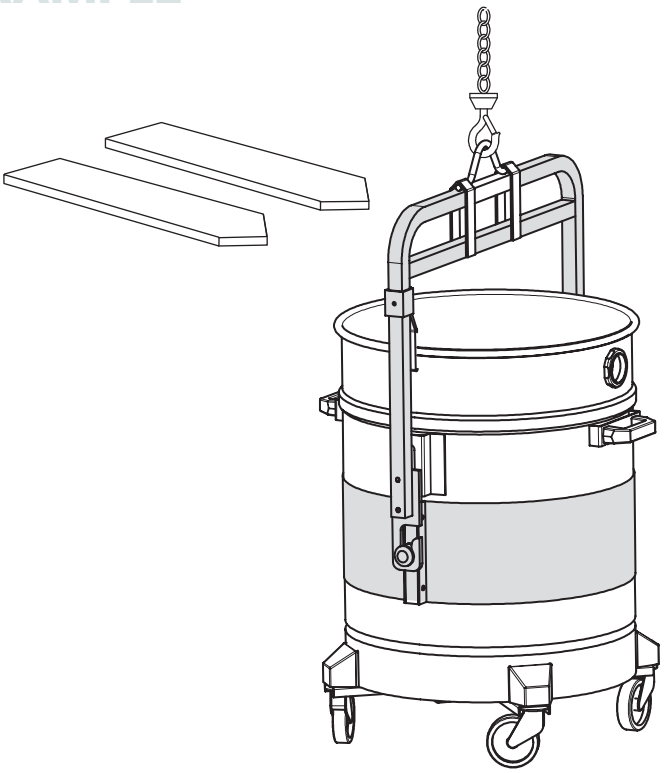

Machine lifting systems

Assists in the transportation of the machine with use of a forklift, or hook and chain.

MACHINE LIFTING SYSTEMS	MODEL	PAINTED	ZINC-PLATED IRON	STAINLESS STEEL	NOTE	CODE
	S2-S3 S2B-S3B		•			4056000493
	MINUS SERIES PLUS SERIES T75		•			4056000685
	SERIES 3707-3907	Yellow RAL 1003	•			Z8 36415 (2 PIECES)
	SERIES 3907/18 780	Yellow RAL 1003	•			4083600585 (2 PIECES)

EXAMPLE

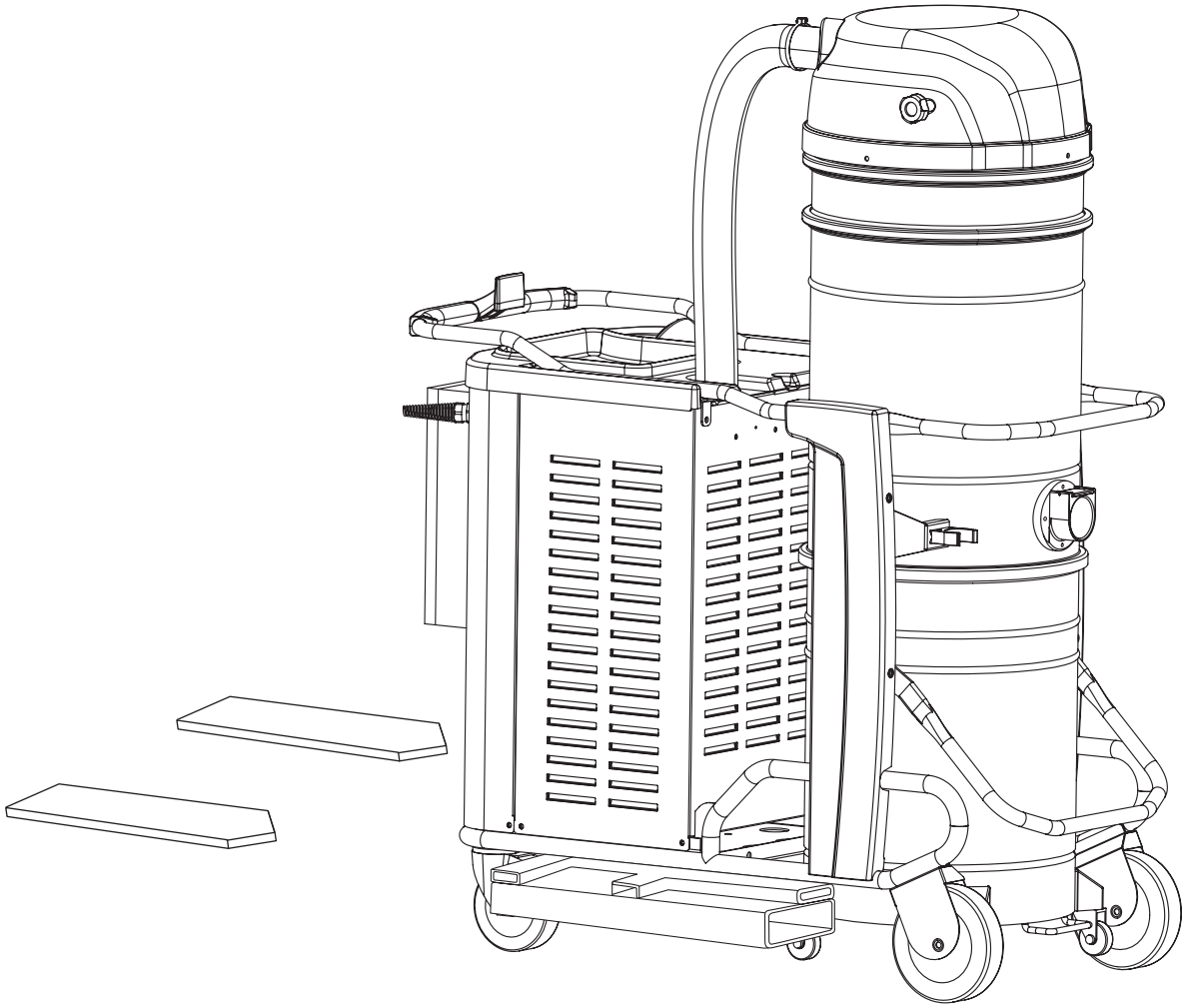

Liquid automatic stop

Employed during the recovery of liquids, impedes overfilling of the container, and powers down the vacuum cleaner automatically. The unit powers down when the maximum liquid level is reached in the container.

LEVEL CONTROL	MODEL	MAGNETIC SENSOR	PRESSURE SWITCH	NOTE	CODE
	3707-3907 series	•		EXAMPLE 1	Z5 60156

LEVEL CONTROL	MODEL	MAGNETIC SENSOR	PRESSURE SWITCH	NOTE	CODE
	S2-S3		•	EXAMPLE 2	4056000498

LEVEL CONTROL WITH PRESSURE SWITCH	MODEL	MAGNETIC SENSOR	PRESSURE SWITCH	NOTE	CODE
	137-Sol single-phase		•	For V230	Z5 60353
				For V120	Z5 60353N1
	Sol3			For V400 EXAMPLE 2	Z5 60347
	Sol5W				Z5 60348
	T40 - T40W				4056000525
	T22				4056000571

EXAMPLE 1

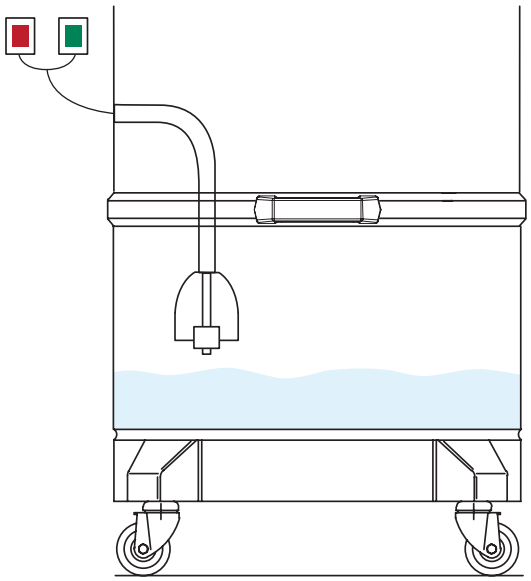

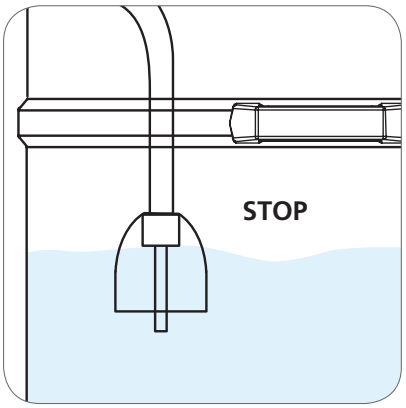

EXAMPLE 2

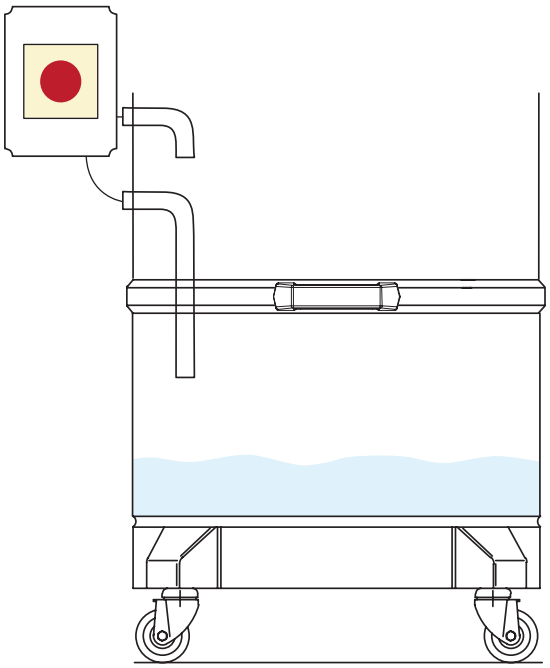

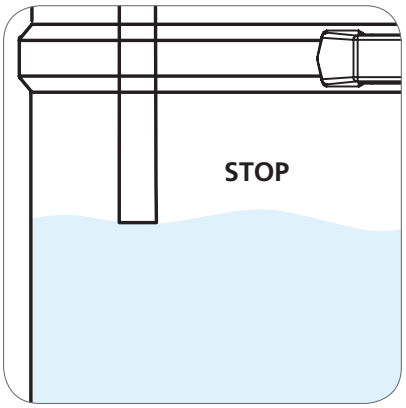

Solid automatic stop

Employed during the recovery of solids, avoids the overfilling of the container, and powers down the vacuum cleaner automatically. The unit powers down when the maximum solid level is reached in the container.

LEVEL CONTROL	MODEL	ZINC-PLATED IRON	STAINLESS STEEL	NOTE	CODE
	S2-S3	•		Mechanical tilting system with level sensor and bracket. Setting can be done by the electronic panel	4056000485
	T[PLUS] SERIES	•		Mechanical tilting system with level sensor and bracket only. A dedicated electrical panel is needed (not included).	4089100124

EXAMPLE

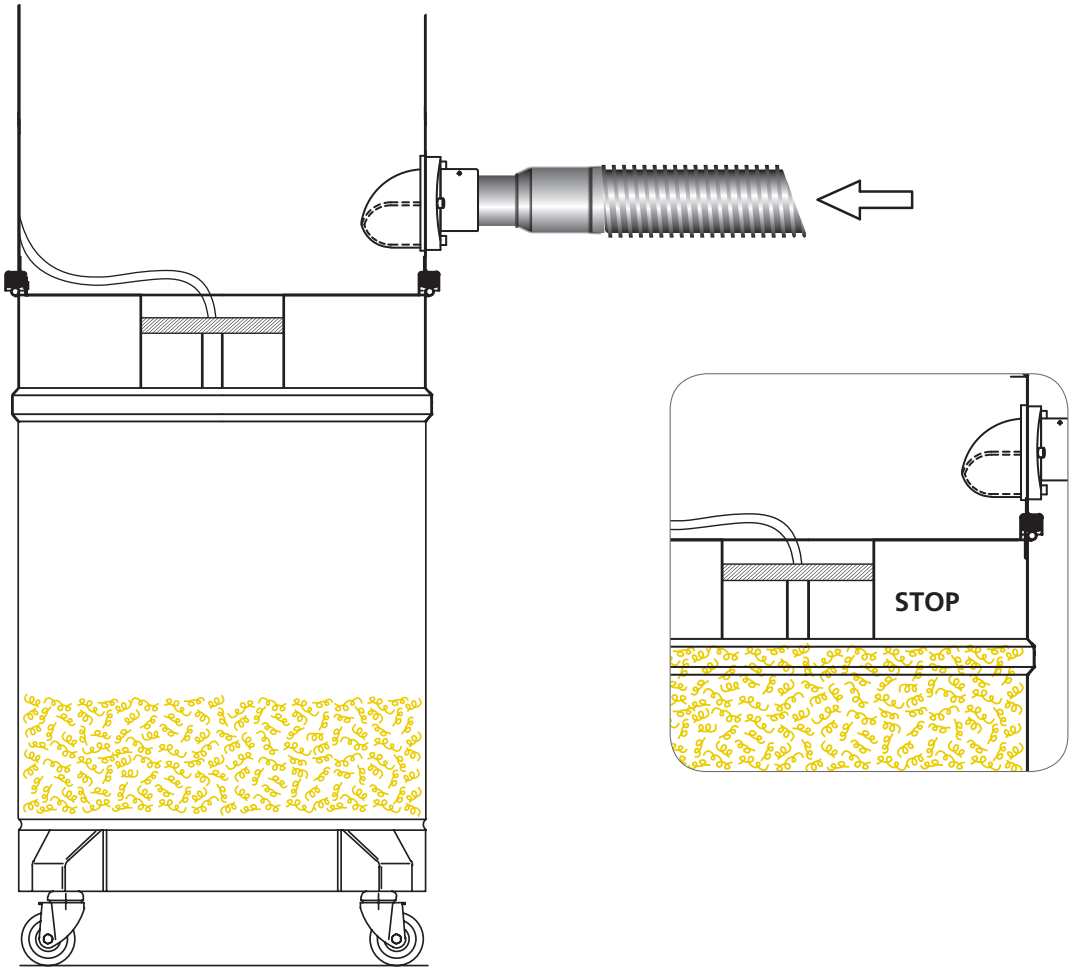

Liquid mechanical stop

Ideal for vacuuming liquids. The system, made of stainless steel, stops mechanically the flow when the maximum liquid level is reached in the container. Mainly used on the compressed air models or when the electrical automatic stop is not allowed.

MECHANICAL FLOAT	Ø mm	NOTE	
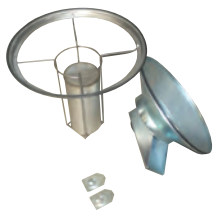	460	Zinc-plated iron cyclone	4056000519
		Stainless steel cyclone	4056000530

EXAMPLE

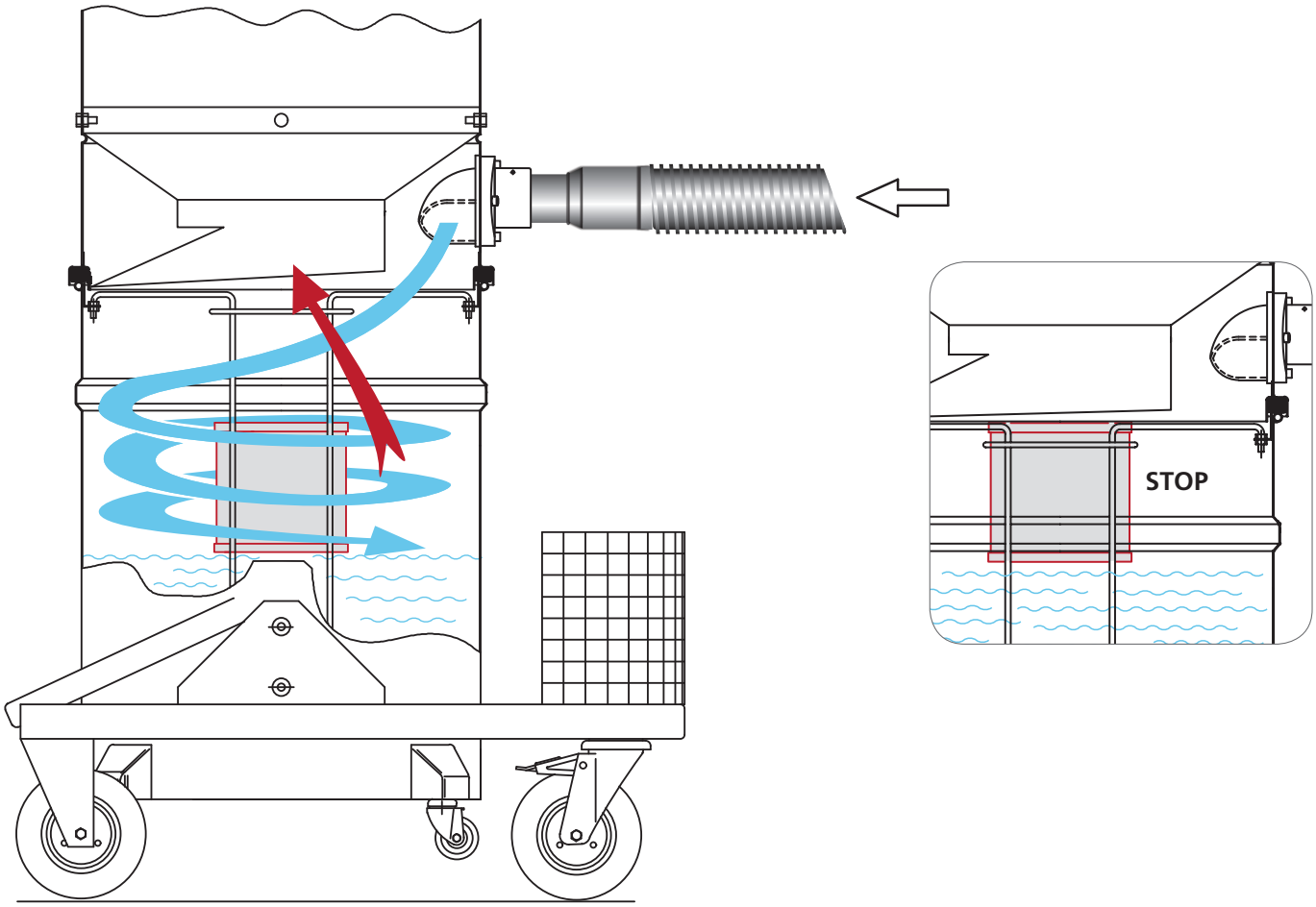

Electric filter shaker

Used to clean the filter at the end of the work cycle. With the machine turned off, press the button on the electrical board to activate the electric filter shaker to clean the Star-shaped filter.

FILTER SHAKER	MODEL	PAINTED	STAINLESS STEEL	NOTE	CODE
	3707-3907 series	Grey RAL 7001		Ø 560	Z5 60081
			•		Z5 60081 X
	3997 series	Grey RAL 7001		Ø 780	Z5 60083

COMPLETE HEAD WITH ELECTRIC FILTER SHAKER	MODEL	PAINTED	STAINLESS STEEL	NOTE	CODE
	3308-3508 series	Grey RAL 7001		Ø 460 A dedicated electrical panel is needed (not included)	Z5 60322
	3558 series	Grey RAL 7001		Ø 560 A dedicated electrical panel is needed (not included)"	Z5 60323
			•		Z5 60352

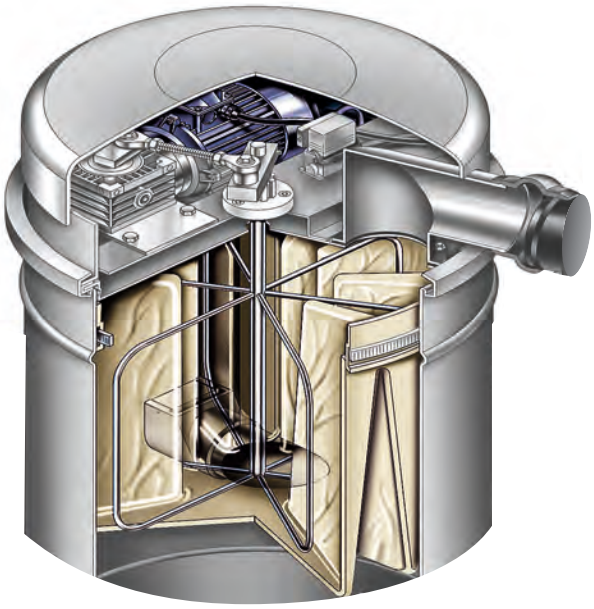

Cartridge kit

Automatic and continuous cleaning of the cartridges whilst vacuuming very fine or dry powders. The system allows to clean the filter elements by way of applying a compressed air jet inside each individual cartridge in a cyclic way, without the need to turn the vacuum cleaner off. Standard cartridges are antistatic - M class.

3 CARTRIDGE KIT	MODEL	PAINTED	STAINLESS STEEL	Z22	PTFE CARTRIDGES	NOTE	CODE
	3306 series	White RAL 9003				Ø 460 (3 cartridges) For transformations of standard machines (without electrical board with transformer) order also: · Z8 41198 (electrical board) · 1,8mt of Z7 24025 (air hose for standard models)	Z5 60077 B
			•				Z5 60113

3 CARTRIDGE KIT	MODEL	PAINTED	STAINLESS STEEL	Z22	PTFE CARTRIDGES	NOTE	CODE
	3308-3508 series	Grey RAL 7001				Ø 460 (3 cartridges) For transformations of standard machines (without electrical board with transformer) order also electric system Z8 41590 (3308 - T22PLUS series) or Z8 41591 (3508 - T40PLUS series)	Z5 60311
			•				Z5 60334
		Grey RAL 7001			•		4056000446
	TPLUS-T75 CTS SERIES	Grey RAL 7001					4056000513
			•				4056000580

4 CARTRIDGE KIT	MODEL	PAINTED	SS	Z22	PTFE	Z21	NOTE	CODE
	3558 series	Grey RAL 7001					Ø 560 (4 cartridges) For transformations of standard machines (without electrical board with transformer) order also electric system Z8 41591 (3558 series)	Z5 60312
			•					Z5 60382
	3707-3907 series	Grey RAL 7001					Ø 560 (4 cartridges) For transformations of standard machines order also: P/N 40000757	Z5 60078
			•					Z5 60114
		Grey RAL 7001		•	•			4056000421
			•		•			Z5 60293

REPLACEMENT CARTRIDGE	NOTE	CODE
	Standard polyester antistatic replacement cartridge - M class	Z8 33140
	Polyester antistatic replacement cartridge - M class + PTFE membrane	Z8 33258

EXAMPLE

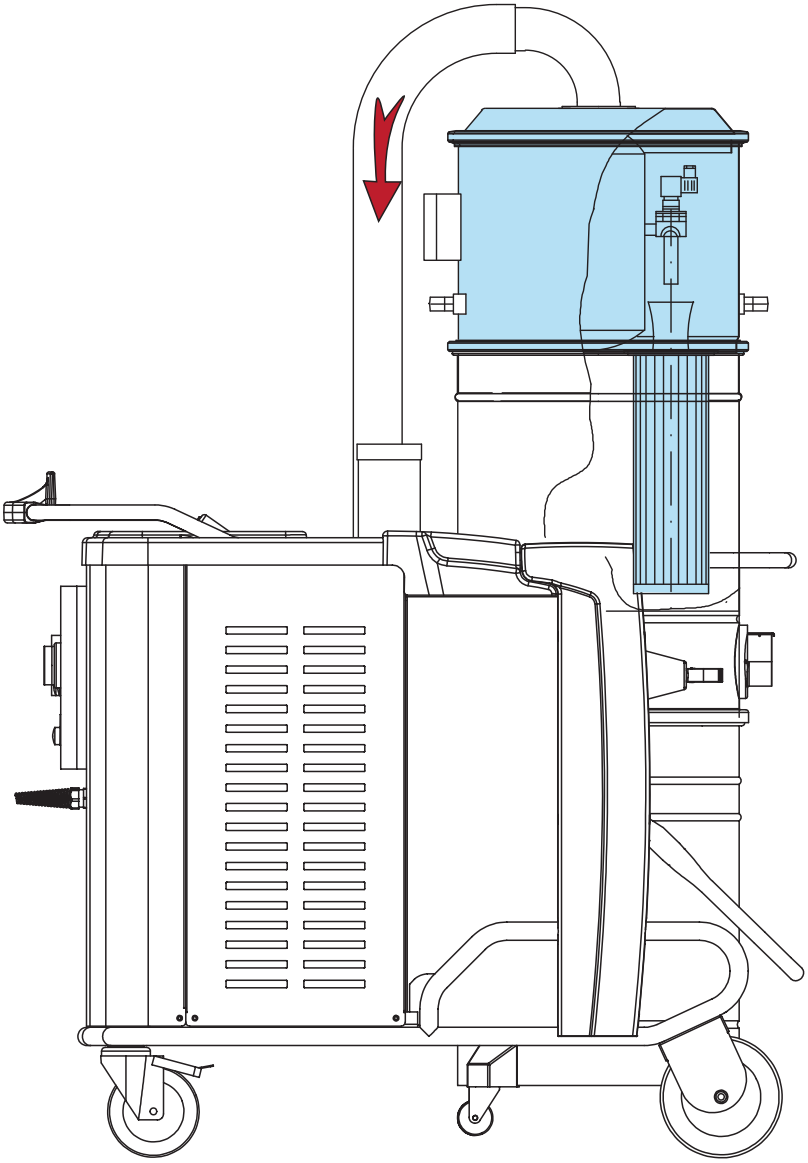

Upstream absolute filter kit (HEPA H14)

Used for obtaining the maximum filter efficiency for incoming particles. Filters 99.995% (method MPPS) of particles with a diameter of 0.1-0.2 micron. Acts as a backup filter should the primary filter fail. Instruments available to indicate the degree of clogging of the absolute filter element hence when it's due for substitution.

UPSTREAM ABSOLUTE FILTER	MODEL	PAINTED	STAINLESS STEEL	NOTE	CODE
	S2/S3 - T^{PLUS} - T75	Grey RAL 7001		Replacement filter 4081700935	4056000478
			•		4056000577
	T22- T40W T40 - VHC200	Grey RAL 7001			4056000523
	S2/S3 - T^{PLUS}			Reinforced absolute filter for H Class certified vacuums. Replacement filter 4081700936	4056000479

UPSTREAM ABSOLUTE FILTER	MODEL	PAINTED	STAINLESS STEEL	NOTE	CODE
	127-137 series			Replacement filter Z8 17455	Z5 60276
	125-1216 series				Z5 60357
	CTT-CTS series	Grey RAL 7001			4056000395
			•		4056000467
	3306 series	White RAL 9003		Only for models starting from January 2010. For previous models see the vacuum A17.	4056000470
			•	Replacement filter Z8 17455	4056000471

UPSTREAM ABSOLUTE FILTER	MODEL	PAINTED	STAINLESS STEEL	NOTE	CODE
	3307-3507 series	Grey RAL 7001		Replacement filter Z8 17050	Z5 60145
			•		Z5 60148
	3707-3907 series	Grey RAL 7001		Replacement filter Z8 17264	Z5 60146
			•		Z5 60147

UPSTREAM ABSOLUTE FILTER	MODEL	PAINTED	STAINLESS STEEL	NOTE	CODE
	3101 series	White RAL 9003		Replacement filter Z8 17262	Z5 60325
	3151 series	White RAL 9003			Z5 60283
			•		Z5 60284
	118 series				Z5 60103

For all details about the single absolute filter, please refer to the FILTER CATALOGUE.

UPSTREAM ABSOLUTE FILTER	MODEL	PAINTED	STAINLESS STEEL	NOTE	CODE
	VHW200/VHW210/ VHW201/VHW211			Replacement filter Z8 17262	4089100665
	VHW310	White RAL 9003			4056000604
	VHW311	White RAL 9003			4083200753
			•		4083200755
	VHW320	n° 2 conical cartridges H14 exclude ATEX versions			4081701070
	VHW321	White RAL 9003		Replacement filter 4089100403	4056000601
			•		4056000639

UPSTREAM ABSOLUTE FILTER	MODEL	PAINTED	STAINLESS STEEL	NOTE	CODE
	VHW420 VHW440 C	White RAL 9003		Replacement filter 4081700935	4056000548
			•	Kits - replacement filter 4089100520	4056000652
	VHW420/440 IC	White RAL 9003			4056000701
			•		4056000702
	VHW421	White RAL 9003			4056000646
			•		4056000647
	VHW420 VHW440	n° 4 conical cartridges H14 exclude ATEX versions			4081701070

UPSTREAM ABSOLUTE FILTER	MODEL	ZINC-PLATED	STAINLESS STEEL	NOTE	CODE
	A15 series		•		Z5 60326
	15ATEX series		•		Z5 60364

For all details about the single absolute filter, please refer to the FILTER CATALOGUE.

EXAMPLE

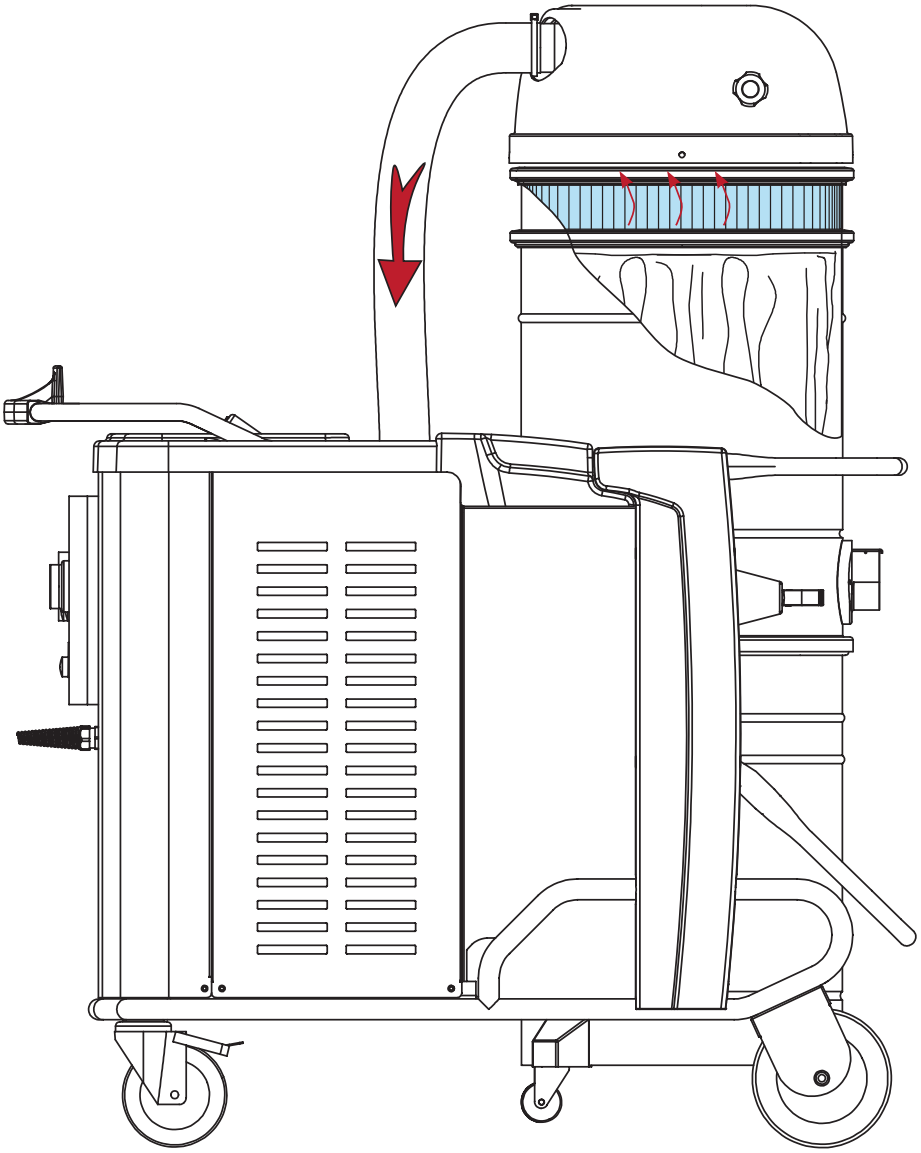

Downstream absolute filter kit (HEPA H14, ULPA 15)

Utilized for obtaining the maximum filter efficiency for exhausting particles. Filters 99.995% (method MPPS) of particles with a diameter of 0.1-0.2 micron. Instruments available to indicate the degree of clogging of the absolute filter element hence when it's due for substitution.

DOWNSTREAM ABSOLUTE FILTER	MODEL	PAINTED	STAINLESS STEEL	H14	U15	NOTE	CODE
	3156 series	White RAL 9003		•		Replacement filter Z8 17091	Z5 60093
			•	•			Z5 60099
	3306 series	White RAL 9003		•		Replacement filter Z8 17092	Z5 60094
			•	•			Z5 60100

DOWNSTREAM ABSOLUTE FILTER	MODEL	PAINTED	STAINLESS STEEL	H14	U15	NOTE	CODE
	T^{PLUS} series	Grey RAL 7001			•	Replacement filter Z8 17653	4089100100
			•		•		4056000582
	3308-3508 series	Grey RAL 7001			•		Z5 60321

ABSOLUTE FILTER	MODEL	PAINTED	STAINLESS STEEL	H14	U15	NOTE	CODE
	3707-3907 series	Grey RAL 7001		•		Replacement filter Z8 17093	Z5 60069
	3997W series	Grey RAL 7001		•		Replacement filter Z8 17053	Z5 60098

DOWNSTREAM ABSOLUTE FILTER	MODEL	PAINTED	STAINLESS STEEL	H14	U15	NOTE	CODE
	CTS series	Grey RAL 7001			•	Replacement filter 21779000	4056000400
	CTT series	Grey RAL 7001			•		4056000412

For all details about the single absolute filter, please refer to the FILTER CATALOGUE.

DOWNSTREAM ABSOLUTE FILTER	MODEL	PAINTED	STAINLESS STEEL	H14	U15	NOTE	CODE
	VHW210	White RAL 9003		•		Replacement filter Z8 17262	4089100682
	VHW201	White RAL 9003		•			4089100729
	VHW211	White RAL 9003		•			4083200820
	VHW310	White RAL 9003		•			4056000605
	VHW311			•		Only filter element	Z8 17262
	VHW320			•			Z8 17262
	VHW321			•			Z8 17262
	VHW311				•		4081701068
	VHW320				•		4081701068
	VHW321				•		4081701068
	VHW420			•			4081701076
	VHW421			•			4081701076
	VHW440			•			4081701076

EXAMPLE

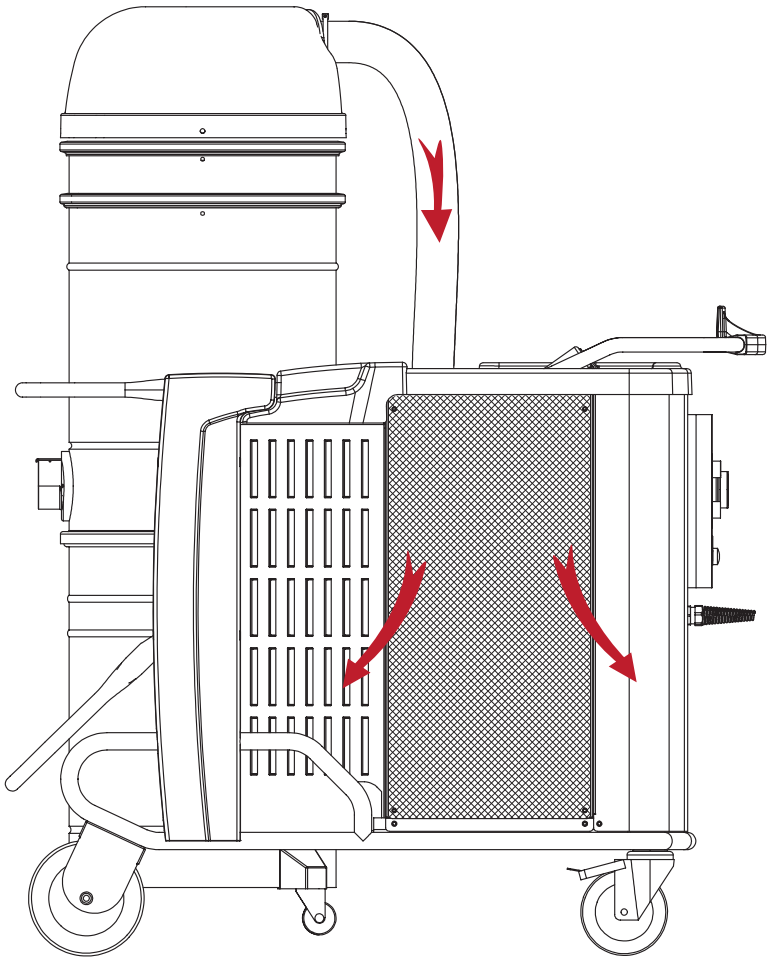

For all details about the single absolute filter, please refer to the FILTER CATALOGUE.

Activated carbon filters

If malodorous materials must be removed, an Activated Carbon filter is recommended.
When low concentration of pollutants must be removed as in laboratories, electronics, pharmaceutical industries, an Activated Carbon Filter can be used.

ACTIVATED CARBON FILTERS	MODEL	PAINTED	STAINLESS STEEL	UPSTREAM	DOWNSTREAM	FILTER REPLACEMENT	CODE
	TPLUS	Grey RAL 7001			•	Z8 17700	4056000583
			•		•		4056000686
	VHC200		•	•		4081701032	4056000574
		Grey RAL 7001		•			4056000687
	CTS-CTT	Grey RAL 7001		•		Z8 17720	4056000688
			•	•			4056000689
	118	Grey RAL 7001		•		Z8 17322	4056000690
	3707 SERIES	Grey RAL 7001			•	Z8 17558	Z5 60287
	VHW 310	White RAL 9003			•	Z8 17322	4056000695
	VHW311-320-321				•	ONLY FILTER ELEMENT	Z8 17322
	VHW420-421-440				•		4081701108

Diffuser kit

Its function is to reduce air speed of the exhausted air via the silencer. In accordance with H class regulations, the air speed at the exhaust must be less than 1 m/s.

DIFFUSER	MODEL	PAINTED	STAINLESS STEEL	NOTE	CODE
	3156 series	White RAL 9003			Z5 60262
	3306 series	White RAL 9003			Z5 60263

DIFFUSER	MODEL	PAINTED	STAINLESS STEEL	NOTE	CODE
	3707-3907 series	Grey RAL 7001			Z5 60265

DIFFUSER	MODEL	PAINTED	STAINLESS STEEL	NOTE	CODE
	3997-CV	Grey RAL 7001			Z8 32197

EXAMPLE

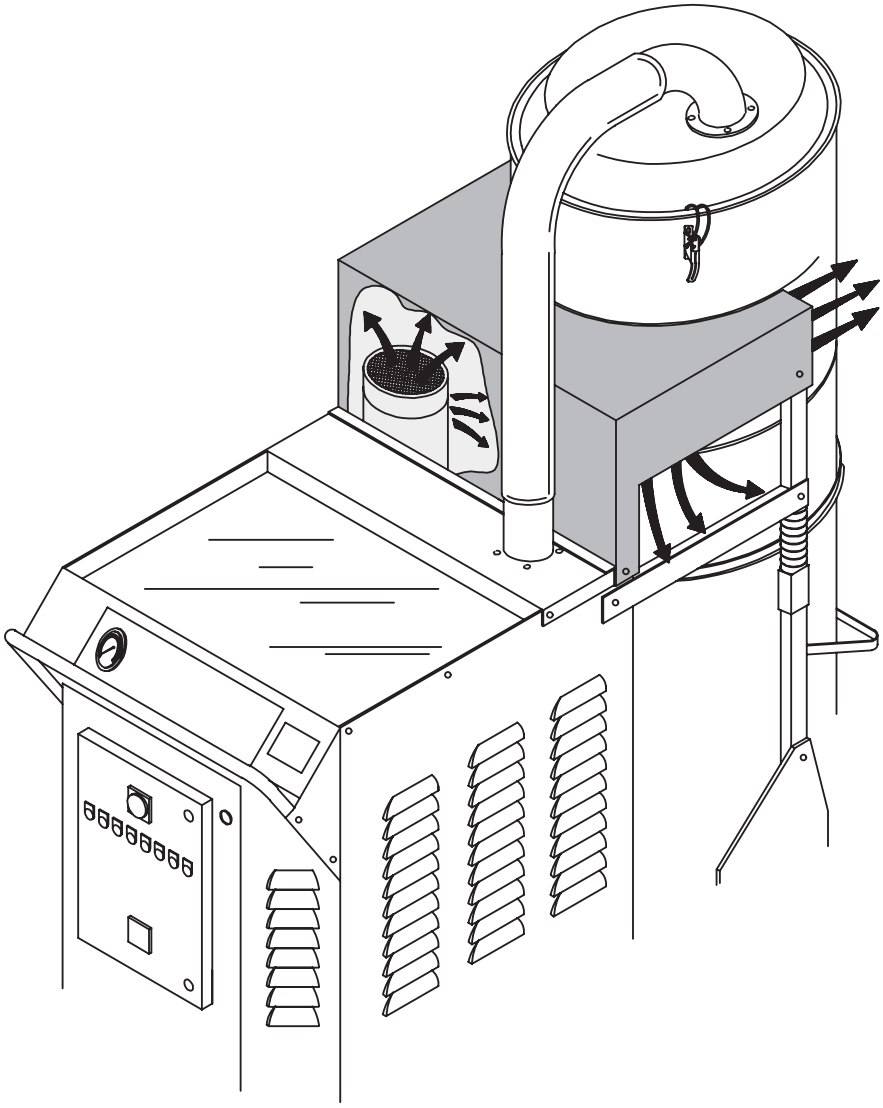

Tilting discharge device

To discharge the vacuumed material on the ground or on conveyor belts. The material is discharged by gravity when the vacuum is stopped.

TILTING DISCHARGE DEVICE	MODEL	PAINTED	ZINC-PLATED	STAINLESS STEEL	NOTE	CODE
	Lateral Ø 460 with internal cone and integrated Ø 160 discharge	Grey RAL 7001				Z5 60273
	Lateral Ø 460 with internal cone and integrated Ø 160 discharge			•		Z5 60273 X
	Lateral Ø 560 with internal cone and integrated Ø 160 discharge	Grey RAL 7001				Z5 60274
	Lateral Ø 460 with internal cone and integrated Ø 160 discharge	Grey RAL 7016			Models: S2-S3-T22-T40-T75 Supplied with pack of 5 polyethylene bags LPDE 4084001017	4056000468

INTEGRATED OUTLET	MODEL	PAINTED	ZINC-PLATED	STAINLESS STEEL	NOTE	CODE
	Integrated outlet Ø 460		•		System fixed directly to the Ø 460 side section coupling ring, ideal for sticky material	Z5 60275

EXAMPLE

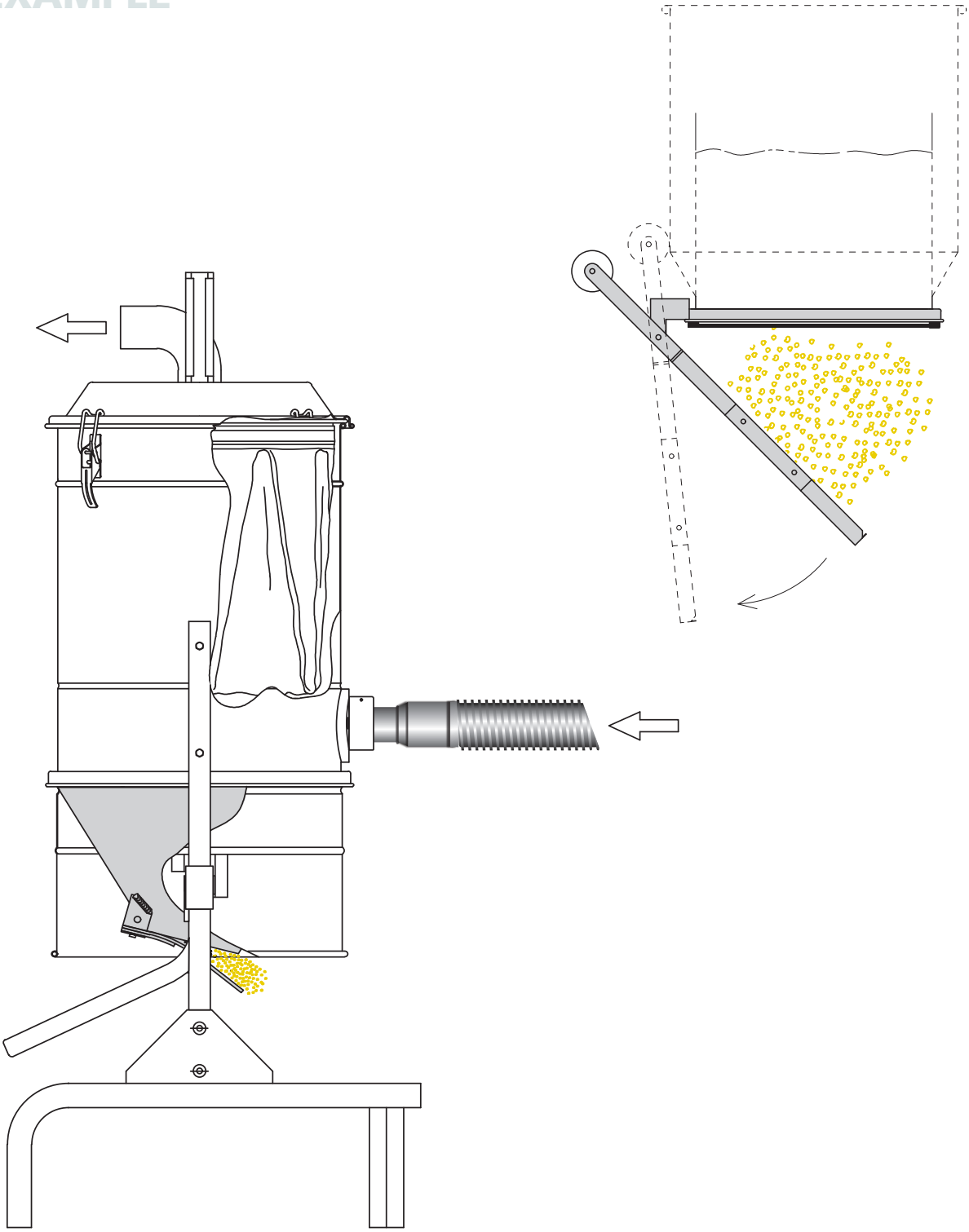

Longopac®

Recovery of collected material in tubular plastic bags as an alternative to the traditional container. The material is discharged by gravity when the vacuum stops. The tubular bag can be cut, sealed or closed to the size required.

LONGOPAC®	MODEL	PAINTED	STAINLESS STEEL	NOTE	CODE
	137 series - SOL series	Black RAL 9005		Mounted on versions with 100 L container	4056000433
	3308-3508 series	Black RAL 9005		Cannot be mounted on 3558 versions	4056000432
	New S-T series	Grey RAL 7016		Mounted on new S-T models	4056000586

REPLACEMENT BAG	NOTE	CODE
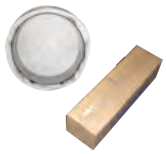	Replacement bag - 4x20 m - For 137 series, SOL series and 3308-3508 series	4084000956
	Pack of 5 polyethylene bags - LDPE - For S-T series	4084001017

EXAMPLE

Vacuum arm kit

Provides a possible solution for extraction directly on the production line or powder pick-up point. The system has adjustable vacuum arms and hoods.

VACUUM ARMS	MODEL	PAINTED	STAINLESS STEEL	NOTE	CODE
	3156 series	White RAL 9003		Arm Ø50 - Hood Ø200	Z5 60256
	3306 series	White RAL 9003		Arm Ø75 - Hood Ø200	Z5 60257
			•	Arm Ø75 - Hood Ø200	Z5 60288
	VHW320/321	White RAL 9003		Arm Ø50 - Hood Ø200	4056000612
			•	Arm Ø50 - Hood Ø200	4056000681
	VHW420/421/440	White RAL 9003		Arm Ø75 - Hood Ø200	4056000682
			•	Arm Ø75 - Hood Ø200	4056000683
	3308-3558 series	Grey RAL 7001		Arm Ø75 - Hood Ø200	Z5 60346
	3707-3907 series	Grey RAL 7001		Arm Ø100 - Hood Ø200	Z5 60259
	CTS-CTT SERIES	Grey RAL 7001		Arm Ø75 - Hood Ø200	4056000691
			•		4056000692
	T^{PLUS} SERIES	Grey RAL 7001			4056000693
			•		4056000694

EXAMPLE

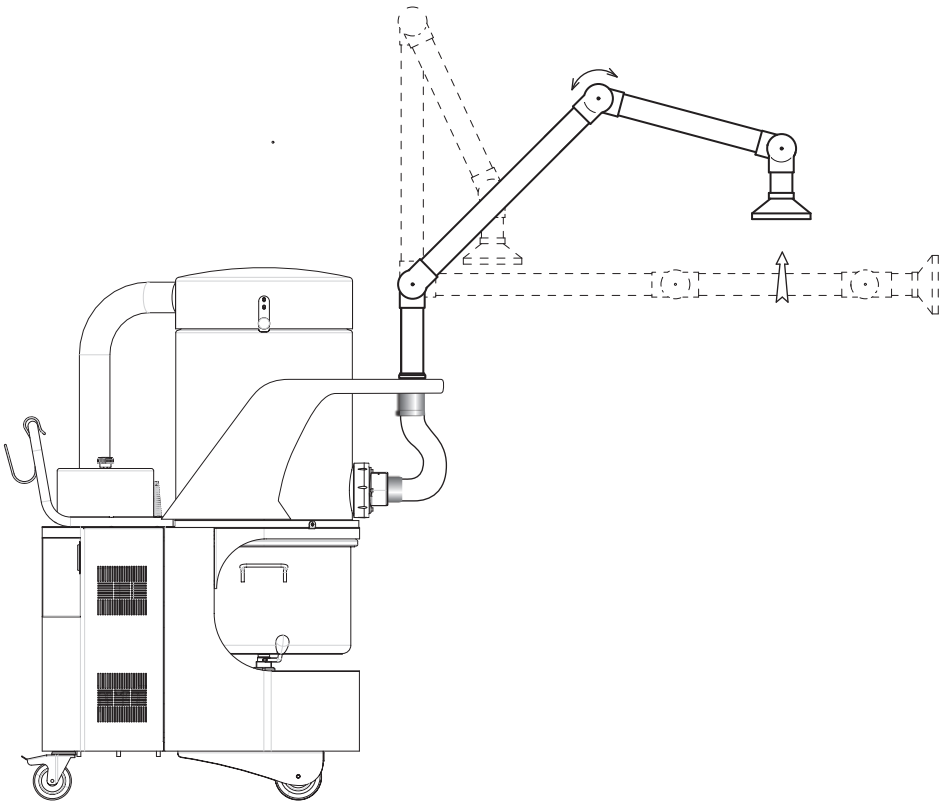

Paper bag inlet

Ideal to set the standard container for the paper bag (see page 37). All the components required for the upgrade are supplied in the Kit.

COMPONENTS KIT	Ø mm	ZINC-PLATED	STAINLESS STEEL	NOTE	CODE
	50	•			Z5 60349
	70	•			Z5 60351
	50-70	•		Kit for Ø 50 inlet complete with 1 x Ø 70 plug	Z5 60350
	50		•		Z5 60373
	70		•		Z5 60375
	50-70		•	Kit for Ø 50 inlet complete with 1 x Ø 70 plug	Z5 60374

PAPER BAG INLET	MODEL	ZINC-PLATED	STAINLESS STEEL	NOTE	CODE
	VHW 320/321/ 420/421/440		•		4089100374

EXAMPLE

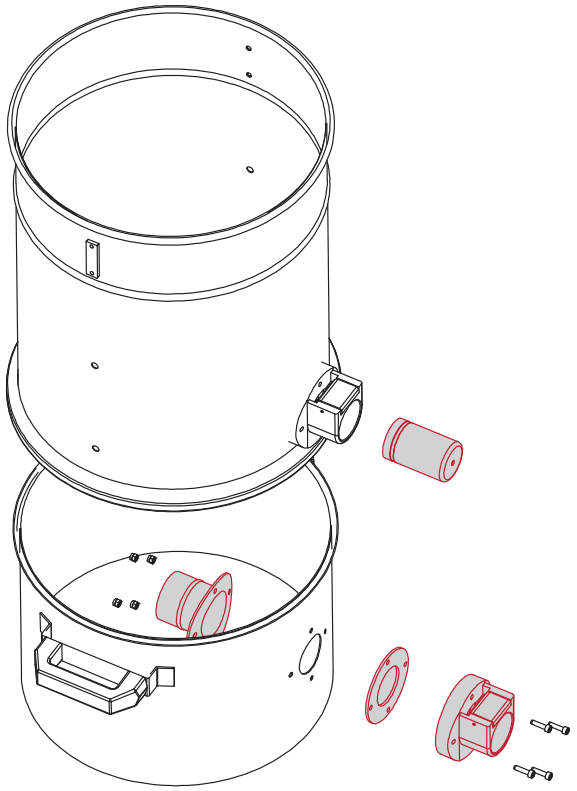

Double intake fitting

Mounted directly upon a 200 L oil drum. The fitting screws onto the lid so you can fill the drum directly with liquid without spillage.

FITTING	Ø mm	ZINC-PLATED	STAINLESS STEEL	NOTE	CODE
	40/50	•			Z7 22180

EXAMPLE

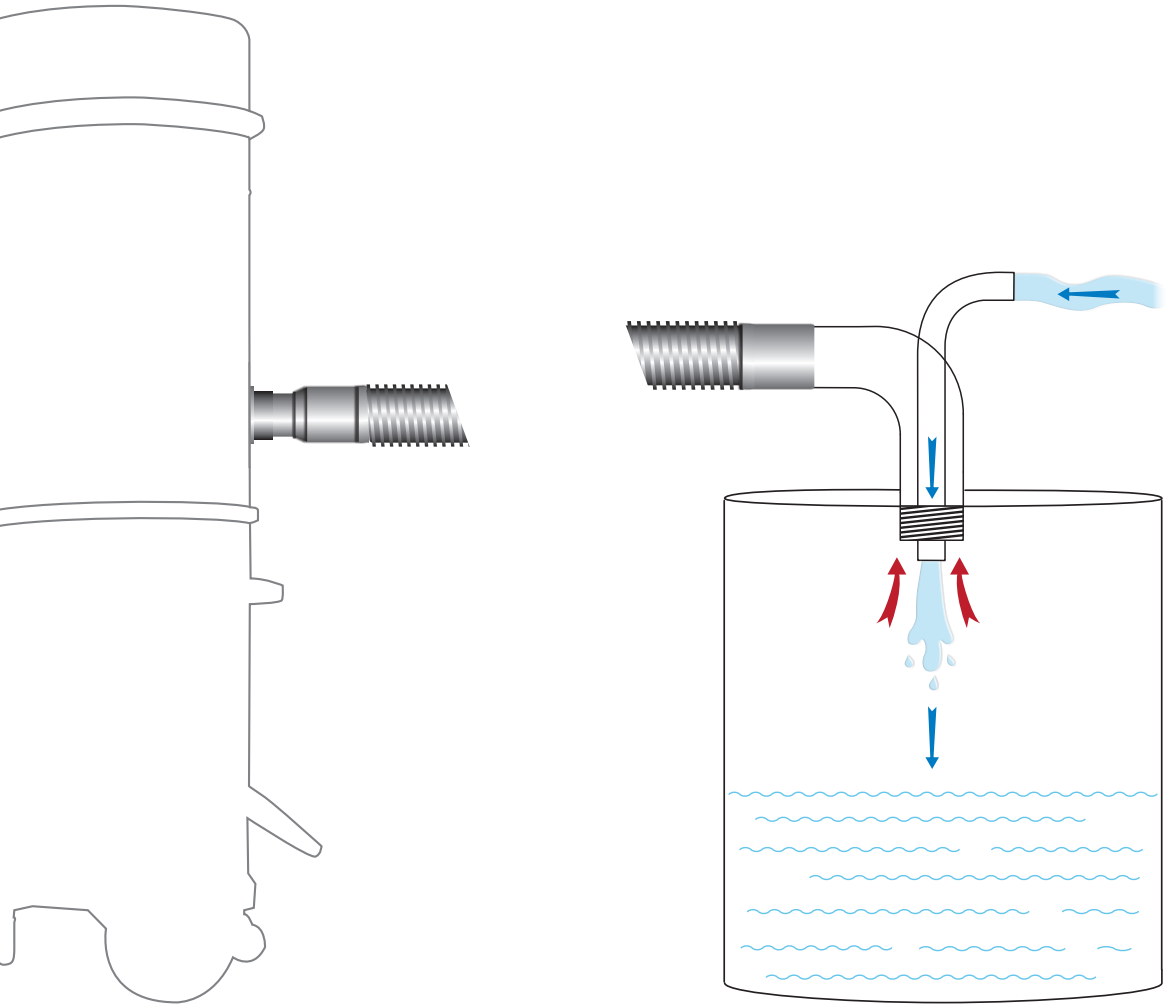

DOUBLE INTAKE FITTING

Shavings basket

Advantageous when vacuuming very wet material. Allows for the collection and separation of shavings from liquids to transport them by a forklift, tackle or other chain system.

SHAVINGS BASKET	Ø mm	ZINC-PLATED IRON	STAINLESS STEEL	NOTE	CODE
	460	•		Shaving basket for Lt.100 container. For Lt.60 container, it is necessary to order the Basket support Z8 12284 The manual valve to discharge the liquid is included in the kit	40000915

SHAVINGS BASKET	Ø mm	ZINC-PLATED	STAINLESS STEEL	NOTE	CODE
	460		•	For model VHO200, suitable also for WST	4056000668

EXAMPLE

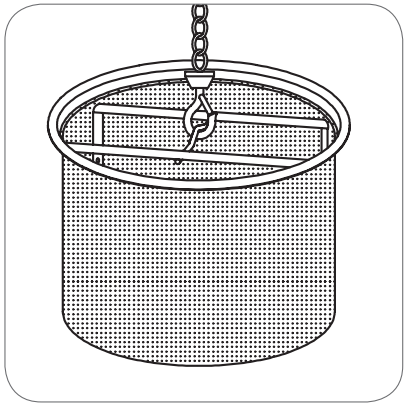

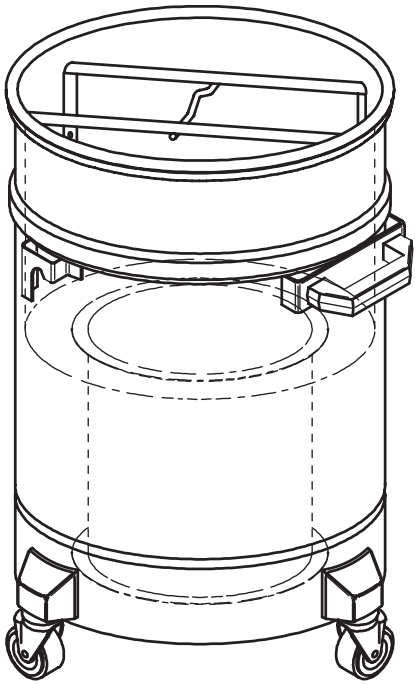

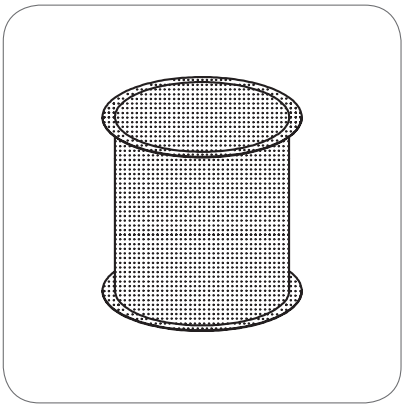

Disposal system kit

The container, interchangeable with the original one, is supplied with all the necessary components for the paper bag system and the safe bag system. The safe bag system is suitable to collect toxic dust. An anti-static bag with a safety closing system is also supplied to guarantee the user doesn't come into contact with the product when emptying. Furthermore, the bag is protected by mesh to prevent rupture.

DISPOSAL SYSTEMS	MODEL	PAINTED	STAINLESS STEEL	NOTE	CODE
	118	Grey RAL 7001		It is supplied with 5pc Paper bag 4084001003	Z5 60327
			•		Z5 60328
	S2	Grey RAL 7001			4056000494
			•		4056000495
	S3/TPLUS	Grey RAL 7001			4056000474
			•		4056000475
	3707 - 3707/10	Grey RAL 7001		It is supplied with 1pc Antistatic safe bag Z8 40832	4056000409
			•		4056000410
	CTS - CTT	Grey RAL 7001			4056000391
			•		4056000396
	VHC200		•		4056000573
	3156		•		4056000503
	3306		•		4056000502
	VHW320/321		•		4056000602
	VHW420/ 421/440		•		4056000645

SAFE PAK	MODEL	NOTE	CODE
	3156/VHW320/VHW321	In case of existing machines not equipped with Safe Pak, it is necessary to order the plug 4089100376.	Z5 60378
	3306/VHW420/ VHW421/VHW440	In case of existing machines not equipped with Safe Pak, it is necessary to order the conversion kit 4056000717.	4056000637
	The Safe-Pak is a consumable ABS container to be used for the collection of dangerous and potent materials, in place of the standard container. When full, it must be removed and disposed of, being replaced with a new one.		

PAPER BAG	Ø mm	NOTE	CODICE
	360	5pc	4084001003
	460		81584000

SAFE BAG	Ø mm	NOTE	CODICE
	360		4084001013
	460		4084001244

ANTISTATIC SAFE BAG	Ø mm	NOTE	CODICE
	360/460		Z8 40874
	460/560		Z8 40832

EXAMPLE

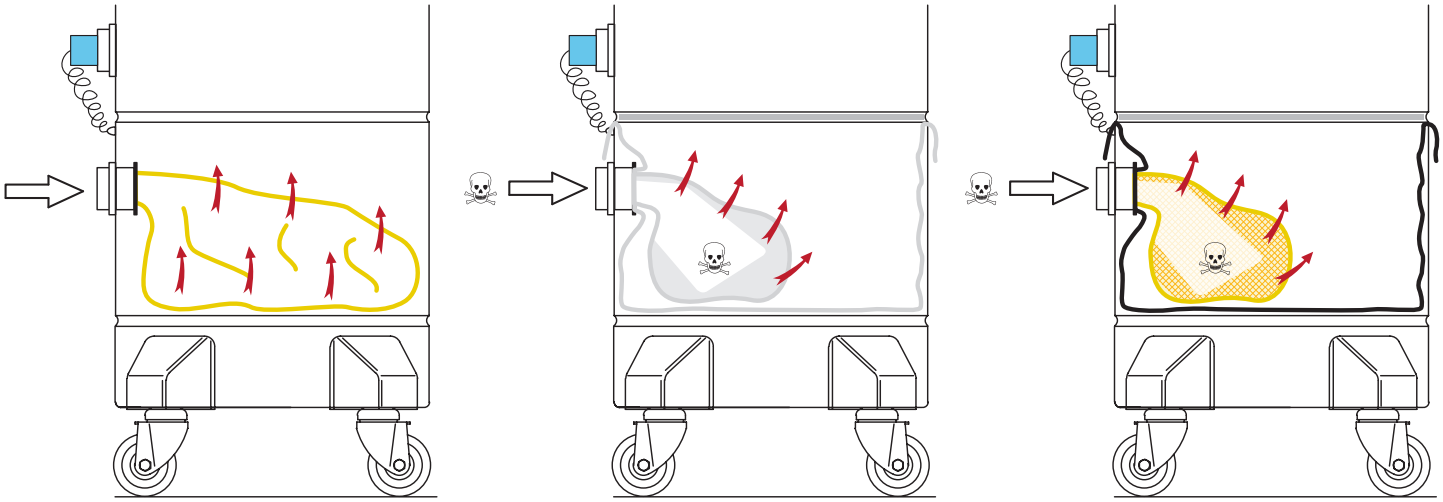

Paper Bag

Safe Bag

Antistatic Safe Bag

Slush filter kit

Increases the level of filtration of the recovered liquid, by insertion of a 300, 100 or 50 micron filter bag inside the mesh basket.

SLUSH FILTER KIT	Ø mm	50 microns	100 microns	300 microns	NOTE	CODE
	460	•			For Eco-Oil model	4083300342
			•			4083300343
				•		4083300344

SLUSH FILTER KIT	Ø mm	50 microns	100 microns	300 microns	NOTE	CODE
	460	•			For model VHO200, suitable also for WST	4056000449
			•			4056000450
				•		4056000451

EXAMPLE

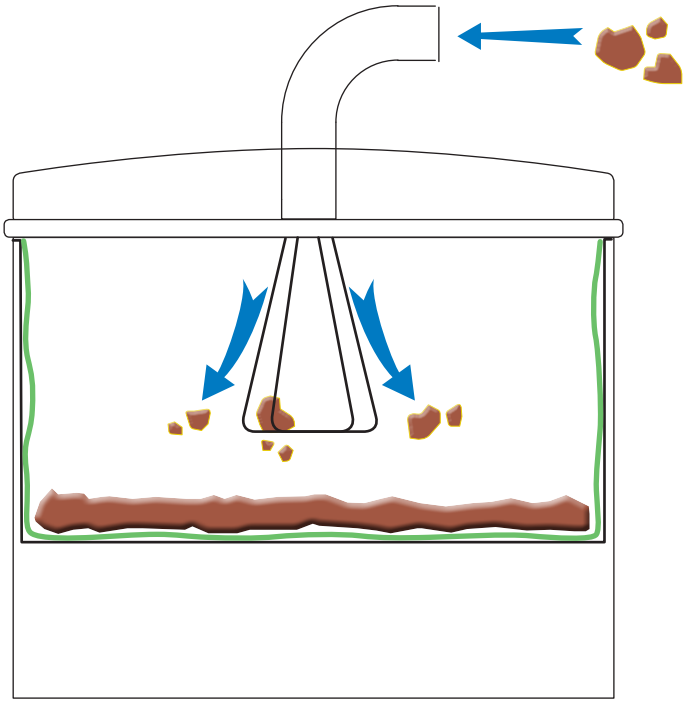

Filtering chambers

Provides better separation and increased filtration efficiency of the material, and also for collection of the material between the point of vacuuming and the vacuum cleaner itself. Ensures integrity of the container on the vacuum cleaner is maintained, and guarantees the efficiency of the primary filter.

FILTER CHAMBER	Ø mm	PAINTED IRON GREY RAL 7001	PAINTED IRON WHITE RAL 9003	STAINLESS STEEL	COUPLINGS	INCLUDED FILTER	CODE
	220		•		Ø 40 couplings	Bag filter (Z8 17036)	Z8 30041
				•			Z8 30046
	280		•		Ø 40 couplings	Bag filter (Z8 17034)	Z8 30042
				•			Z8 30047
			•			Bag filter (Z8 17034) and absolute filter (Z8 17262)	Z8 30042 A
				•			Z8 30047 A
			•			Bag filter (Z8 17034) and suitable for paper bag (81585000)	Z8 30190
			•			Bag filter (Z8 17034), absolute filter (Z8 17262) and suitable for paper bag (81585000)	Z8 30190 A
				•		Bag filter (Z8 17034) and suitable for paper bag (81585000)	Z8 30191
				•		Bag filter (Z8 17034), absolute filter (Z8 17262) and suitable for paper bag (81585000)	Z8 30191 A
	360	•			Ø 50 couplings	Bag filter (40000379)	Z8 30043
			•				Z8 30043 B
			•			Bag filter (40000379) and absolute filter (Z8 17262)	Z8 30043 BA
				•		Bag filter (40000379)	Z8 30048
				•		Bag filter (40000379) and absolute filter (Z8 17262)	Z8 30048 A
			•			Bag filter (40000379) and suitable for paper bag (81585000)	Z8 30205
				•		Bag filter (40000379), absolute filter (Z8 17262) and suitable for paper bag (81585000)	Z8 30269 A
			•			Star-shaped filter (40000315)	Z58 30180
	460	•			Ø 70 inlet, Ø 50 cap fitting	Bag filter (Z8 17041)	Z8 30044
			•				Z8 30044 B
				•			Z8 30049
			•		Ø 70 couplings	Star-shaped filter (40000338)	Z58 30181
				•			Z58 30183
		•			Ø 100 couplings	Oversize star-shaped filter (Z8 17081 1)	4583000383
		•			Ø 100 inlet, Ø 70 cap fitting	Star-shaped filter (40000584)	Z58 30187

EXAMPLE

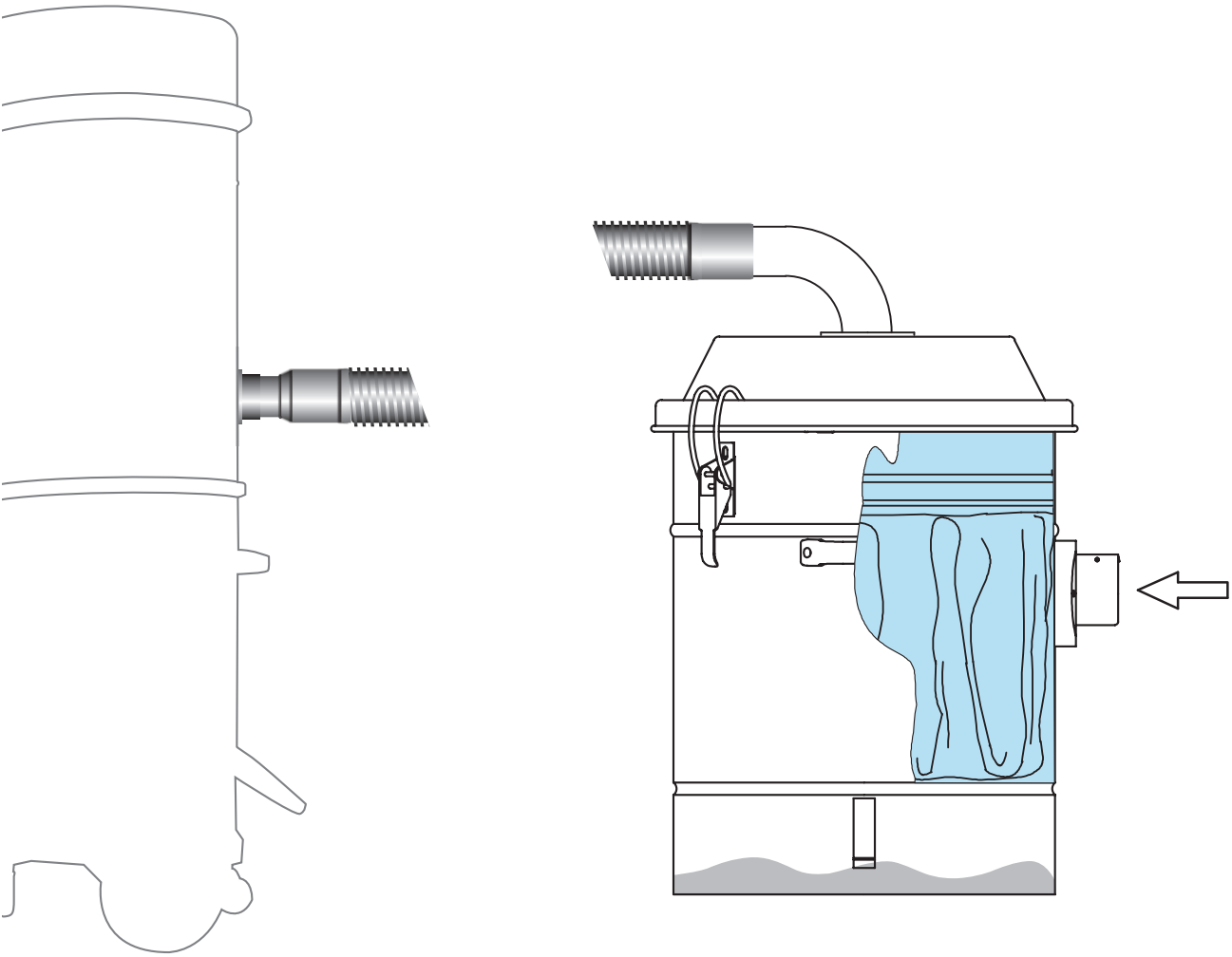

Data, technical characteristics, colors and illustrations can be subject to change without prior notice © 2016

Nilfisk Danmark A/S
Tlf. 43 23 40 50 / 72 18 21 20
www.nilfisk.dk