Separators for industrial vacuum solutions

Nilfisk®

Separators - separate to save

Separators are containers placed between the vacuum point and the vacuum cleaner, and are the most effective way to vacuum and collect solids or liquids without having to use the container on the vacuum cleaner.

For example, if you need to vacuum large amounts of very fine dust, the separator offers the advantage of collecting almost all the vacuumed dust to prevent clogging the vacuum cleaner filter, guaranteeing a longer working life and consistently high performance from the vacuum cleaner. When vacuuming liquids, there is no risk of getting the filter wet and having to replace it often, for the above reasons.

Separators are added value in all intensive applications, offering immediate benefits, saving time, extending the life of the vacuum cleaner and its components, offering greater operational efficiency, safety and environmental protection.

Nilfisk presents its range of separators designed and developed to meet the maintenance and cleaning requirements of manufacturers all over the world.

Table of contents

CODE	PAGE	WASTE	DUST	LIQUIDS	SOLIDS	ATEX
STANDARD						
Z7 22104	6		•	•	•	
Z7 22106	6			•	•	•
Z7 22105	6		•	•	•	
Z7 22107	6			•	•	•
ZS07GE22157	6			•	•	
ZS07LO22041	6		•		•	
Z7 22108	6			•	•	
Z7 22152	6			•	•	
Z7 22290	6			•	•	•
SYSTEM WITH MINI-SEPARATOR						
Z7 22305	8		•			
Z7 22340	8		•			•
Z7 22306	8		•			
Z7 22311	8		•			•
FOR HOT SUBSTANCES						
ZS07IC22004	10		•		•	
ZS07RA22211	10		•		•	
ZS07IC22004X	10		•		•	•
ZS07ET22205	10		•		•	•
ZS07NJ22151	10		•		•	
ZS07LO22196	10		•		•	•
ZS07BO22194	10		•		•	
ZS07RO22139	10		•		•	•
4072200433	10		•		•	•
WITH CARTRIDGE KIT						
4072200435	12		•			•
ZS07AP22190	12		•			
WITH LONGOPAC SYSTEM						
4072200497	14		•		•	
SPECIAL FOR LIQUIDS						
ZS07GE22153	16			•		•
ZS07BO22201	16			•		•
ZS07EC22142	16			•		
Z7 22342 L	16			•		
TROLLEY-MOUNTED						
ZS07DA22050	18		•		•	
ZS07AP22144	18		•		•	
ZS07DA22112	18		•		•	
ZS07GE22090	18		•		•	
ZS07GE22127	18		•		•	
Z8 36404	18		•		•	
ZS07EC22064	18	•			•	
TILTING SYSTEM						
ZS07GE22042	22		•	•	•	
ZS07BO22208	22		•	•	•	
Z7 22158	22		•	•	•	
Z7 22158 X	22		•	•	•	
4072200493	22		•		•	•
OUTLET ON BOTTOM						
4072200415	26		•		•	
R MODELS FOR SCRAPS						
4072200402	28	•			•	
4072200432	28	•			•	
ZS07BA22005	28	•			•	
ZS07HE22114	28	•			•	
ZS07AP22160	28	•			•	
WITH ANTISTATIC BAG						
4072200416	30		•		•	•

- **Make sure the separator is connected to ground and to the intake system by the cable supplied, to discharge any static electricity (if not provided with the separator, install an appropriate cable).**
- **Use only anti-static hoses and suitable accessories (anti-static materials/stainless steel) for vacuuming and vacuum system connections**
- **Check the continuity and the correct connection of the ground and equipotential cables (green-yellow protective conductors) and make sure that they are in perfect conditions.**
- **Use the accessories in a suitable way, and in any case avoid hard knocks or excessive friction (risk of frictional sparks). To clean the floor, use collectors and suction caps that can be replaced with CFM original antistatic spare parts.**
- **Always empty the container, especially after vacuuming organic material, to prevent the formation of gases from fermentation.**

Standard

Ideal for vacuuming and collecting solids, liquids or sludge. Generally used with medium and small machines.

CODE	Z7 22104	Z7 22106	Z7 22105	Z7 22107	ZS07GE22157	ZS07LO22041	Z7 22108	Z7 22152	Z7 22290
Description	Ø 360 separator L50 Ø 50 Fe	Ø 360 separator L50 Ø 50 stainless	Ø 460 separator L100 Ø 50 Fe	Ø 460 separator L100 Ø 50 ess	Ø 460 separator, Ø 70 couplings	Ø 460 separator, Ø 70 couplings	Ø 560 separator L175 Ø 50 Fe	Ø 560 separator L175 Ø 70 Fe	Ø 560 separator L175 Ø 70 stainless
Diameter (mm)	360 mm	360 mm	460 mm	460 mm	460 mm	460 mm	560 mm	560 mm	560 mm
Dimensions	390x390 xH730	390x390 xH730	490x490 xH880	490x490 xH880	490x490 xH880	490x490 xH880	620x620 xH1020	620x620 xH1020	620x620 xH1020
Material	Iron Grey RAL 7001	Brushed steel	Painted iron Grey RAL 7001	Brushed steel	Painted iron Grey RAL 7001	Painted iron Grey RAL 7001	Painted iron Grey RAL 7001	Painted iron Grey RAL 7001	Brushed steel
Capacity (L)	50	50	100	100	100	100	175	175	175
Inlet Ø	50 mm	50 mm	50 mm	50 mm	70 mm	70 mm	50 mm	70 mm	70 mm
Filter	No filter	No filter	No filter	No filter	No filter	No filter	No filter	No filter	No filter
Seal	SBR	Silicone	SBR	Silicone	EPDM bonded to the cap	SBR	EPDM bonded to the cap	EPDM bonded to the cap	Silicone
Suitable for vacuuming	Dust Liquids Solids	Liquids Solids	Dust Liquids Solids	Liquids Solids	Liquids Solids	Dust Solids	Liquids Solids	Liquids Solids	Liquids Solids
Recovery system	Cyclone effect	Gravity	Cyclone effect	Gravity	Gravity	Bag	Gravity	Gravity	Gravity
Connection	Ø 50 hose with sleeves	Ø 50 hose with sleeves	Ø 50 hose with sleeves	Ø 50 hose with sleeves	Ø 50 hose with sleeves	Ø 50 hose with sleeves	Ø 50 hose with sleeves	Ø 50 hose with sleeves	Ø 50 hose with sleeves
Wheels	Ø 60	Ø 80	Ø 60	Ø 80	Ø 60	Ø 60	Ø 100	Ø 100	Ø 80
Suitable for ATEX applications	**NO**	**YES***	**NO**	**YES***	**NO**	**NO**	**NO**	**NO**	**YES***
Material unloading system	Manual	Manual	Manual	Manual	Manual	Manual	Manual	Manual	Manual
Electrical parts	NO	NO	NO	NO	NO	NO	NO	NO	NO
Other features	-	-	-	-	-	Grill and depressor	-	-	-
Example	1	1	1	1	1	2	1	1	1

* ATEX - see the index page for specifications

EXAMPLE 1

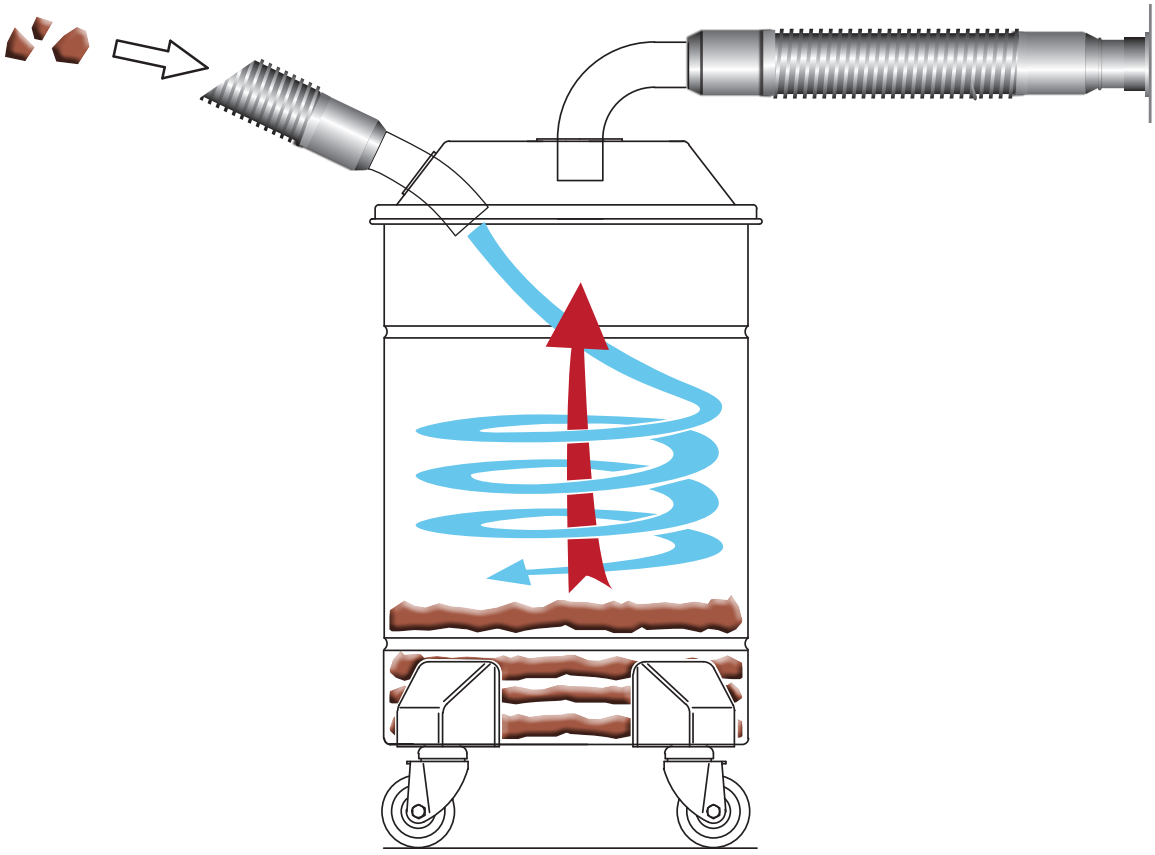

EXAMPLE 2

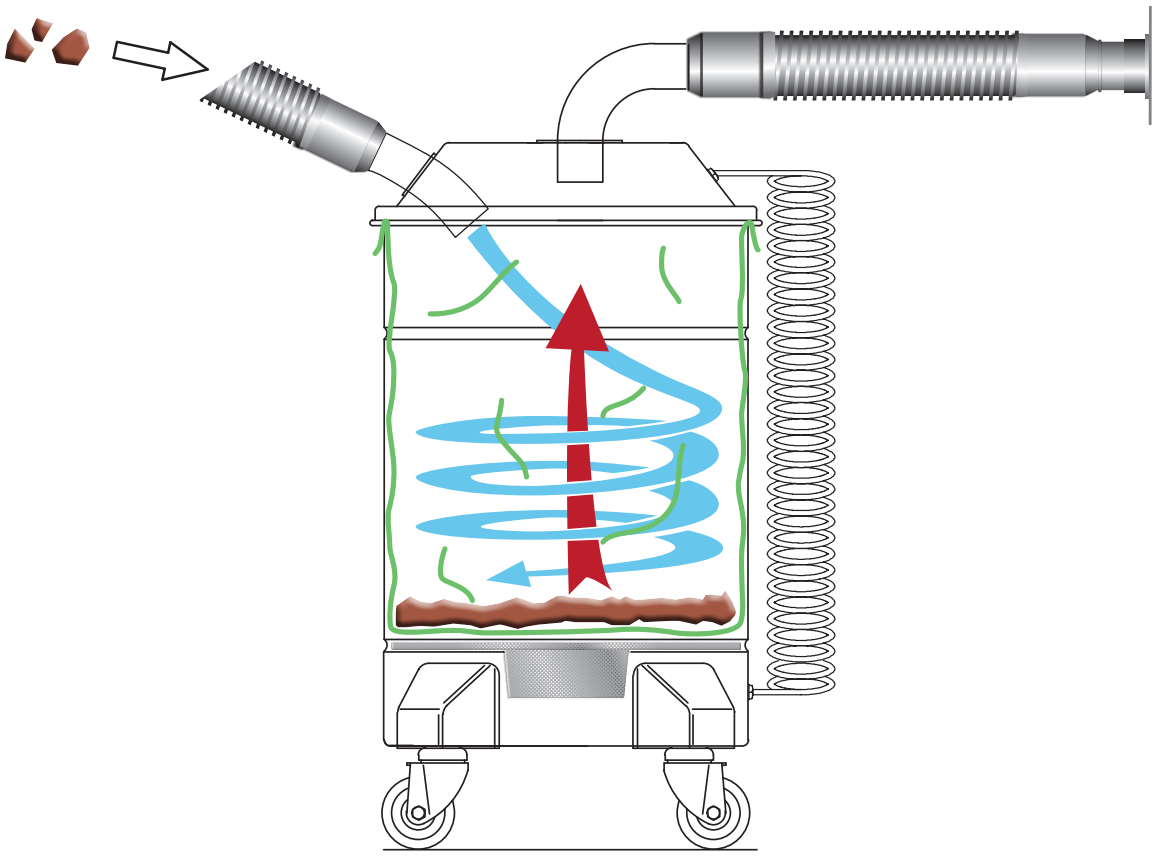

With mini-separator

Ideal for vacuuming and collecting light and dusty materials. The cyclone effect of the cap mini-separator system deposits the material on the bottom of the separator. Generally used with medium and small machines.

CODE	Z7 22305	Z7 22340	Z7 22306	Z7 22311
Description	Ø 460 separator with mini-separator	Ø 460 separator with mini-separator	Ø 560 separator with mini-separator	Ø 560 separator with mini-separator
Diameter (mm)	460 mm	460 mm	560 mm	560 mm
Dimensions	490x490XH1180	490x490xH1180	620x620Xh1320	620x620xH1320
Material	Painted iron Grey RAL 7001	Brushed steel	Painted iron Grey RAL 7001	Brushed steel
Capacity (L)	100	100	175	175
Inlet Ø	100 mm with quick-fit system	100 mm with quick-fit system	100 mm with quick-fit system	100 mm with quick-fit system
Filter	No filter	No filter	No filter	No filter
Seal	EPDM bonded to mini-separator	EPDM bonded to mini-separator	EPDM bonded to mini-separator	EPDM bonded to mini-separator
Suitable for vacuuming	Dust	Dust	Dust	Dust
Recovery system	Cyclone effect	Cyclone effect	Cyclone effect	Cyclone effect
Connection	Hose fitting Ø 100 or reduction 100/70-100/50	Hose fitting Ø 100 or reduction 100/70-100/50	Hose fitting Ø 100 or reduction 100/70-100/50	Hose fitting Ø 100 or reduction 100/70-100/50
Wheels	Ø 60	Ø 80	Ø 100	Ø 80
Suitable for ATEX applications	**NO**	**YES***	**NO**	**YES***
Material unloading system	Manual	Manual	Manual	Manual
Electrical parts	NO	NO	NO	NO
Other features	–	–	–	–
Example	3	3	3	3

* ATEX - see the index page for specifications

EXAMPLE 3

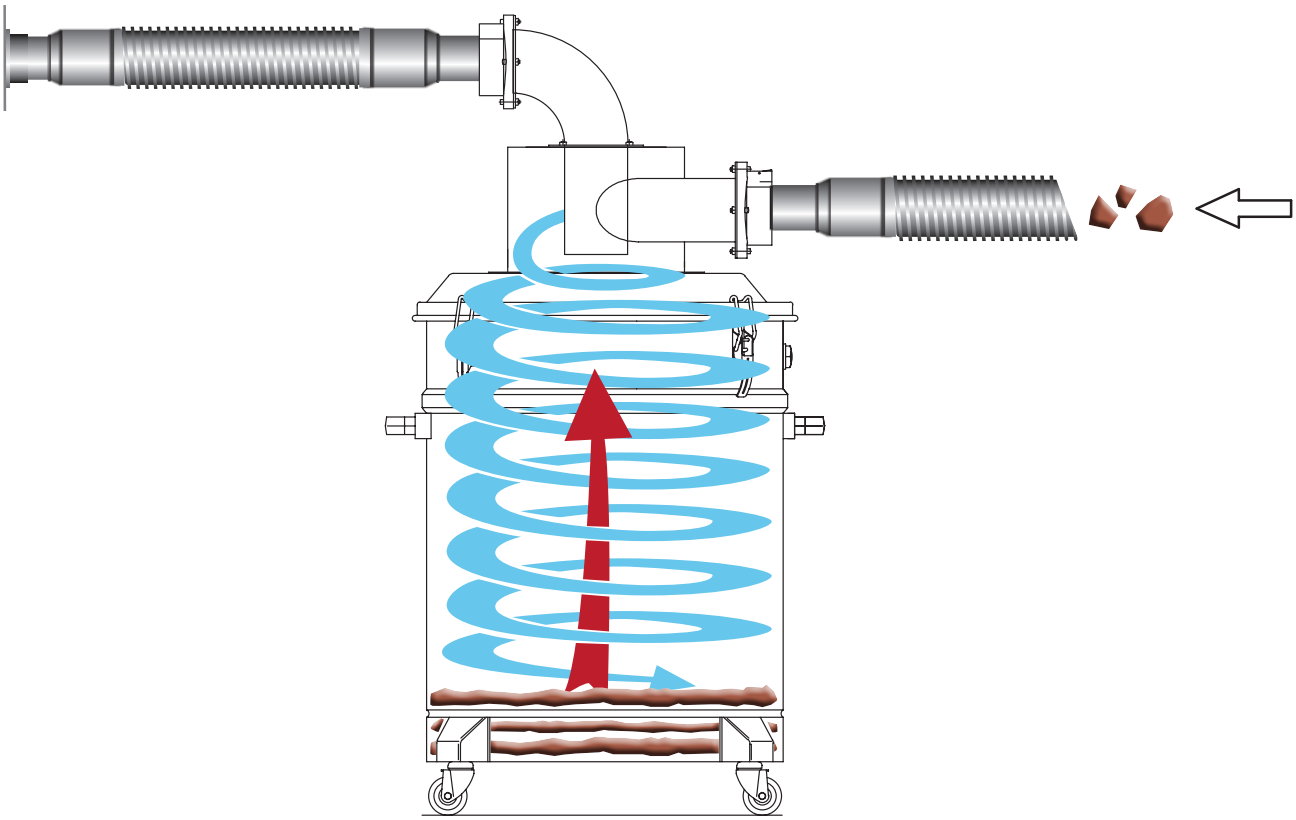

For hot substances

Ideal for vacuuming and collecting hot substances. The material is cooled when it comes into contact with the water in the container. This water immersion system may be suitable for certain applications with dusty materials. Generally used with medium and small machines.

CODE	ZS07IC22004	ZS07RA22211	ZS07IC22004X	ZS07ET22205	ZS07NJ22151	ZS07LO22196	ZS07BO22194	ZS07RO22139	4072200433
Description	Ø 460 L100 Ø 50 separator for hot substances	Ø 460 L100 Ø 70 separator for hot substances	Ø 460 L100 Ø 50 separator for hot substances	Ø 460 L100 Ø 70 separator for hot substances	Ø 560 L175 Ø 70 separator for hot substances	Ø 560 L175 Ø 70 separator for hot substances	Ø 560 L175 Ø 100 separator for hot substances	Ø 460 L100 Ø 50 separator for hot substances	Ø 460 Atex separator for liquids
Diameter (mm)	460 mm	460 mm	460 mm	460 mm	560 mm	560 mm	560 mm	460 mm	460 mm
Dimensions	490x490 xH880	490x490 xH880	490x490 xH880	490x490 xH880	620x620 xH1020	620x620 xH1020	620x620 xH1020	490x490 xH880	490x490 xH880
Material	Painted iron Grey RAL 7001	Painted iron Grey RAL 7001	Brushed steel	Brushed steel	Painted iron Grey RAL 7001	Brushed steel	Painted iron Grey RAL 7001	Brushed steel	Brushed steel
Capacity (L)	100	100	100	100	175	175	175	100	100
Inlet Ø	50 mm with quick-fit system	70 mm with quick-fit system	50 mm with quick-fit system	70 mm with quick-fit system	70 mm with quick-fit system	70 mm with quick-fit system	100 mm with quick-fit system	50 mm with quick-fit system	50 mm with quick-fit system
Filter	No filter	No filter	No filter	No filter	No filter	No filter	No filter	Polyurethane anti-foam filter 10PP	Polyurethane anti-foam filter 10PP
Seal	EPDM bonded to the cap	EPDM bonded to the cap	Silicone	Silicone	EPDM bonded to the cap	Silicone	EPDM bonded to the cap	Silicone	Silicone
Suitable for vacuuming	Dust Solids	Dust Solids	Dust Solids	Dust Solids	Dust Solids	Dust Solids	Dust Solids	Dust Solids	Dust Solids
Recovery system	Gravity	Gravity	Gravity	Gravity	Gravity	Gravity	Gravity	Gravity	Gravity
Connection	Hose fitting Ø 50 or reduction 50/40	Hose fitting Ø 70 or reduction 70/50	Hose fitting Ø 50 or reduction 50/40	Hose fitting Ø 70 or reduction 70/50	Hose fitting Ø 70 or reduction 70/50	Hose fitting Ø 70 or reduction 70/50	Hose fitting Ø 100 or reduction 100/70	Hose fitting Ø 50 or reduction 50/40	Hose fitting Ø 50 or reduction 50/40
Wheels	Ø 60	Ø 60	Ø 80	Ø 80	Ø 100	Ø 80	Ø 100	Ø 80	Ø 60
Suitable for ATEX applications	**NO**	**NO**	**YES***	**YES***	**NO**	**YES***	**NO**	**YES***	**YES***
Material unloading system	Manual	Manual	Manual	Manual	Manual	Manual	Manual	Manual or with ball valve	Manual or with ball valve
Electrical parts	NO	NO	NO	NO	NO	NO	NO	NO	NO
Other features	-	-	-	-	-	-	-	Grill and valve	Grill and external level indicator control valve
Example	4	4	4	4	4	4	4	5	5

* ATEX - see the index page for specifications

EXAMPLE 4

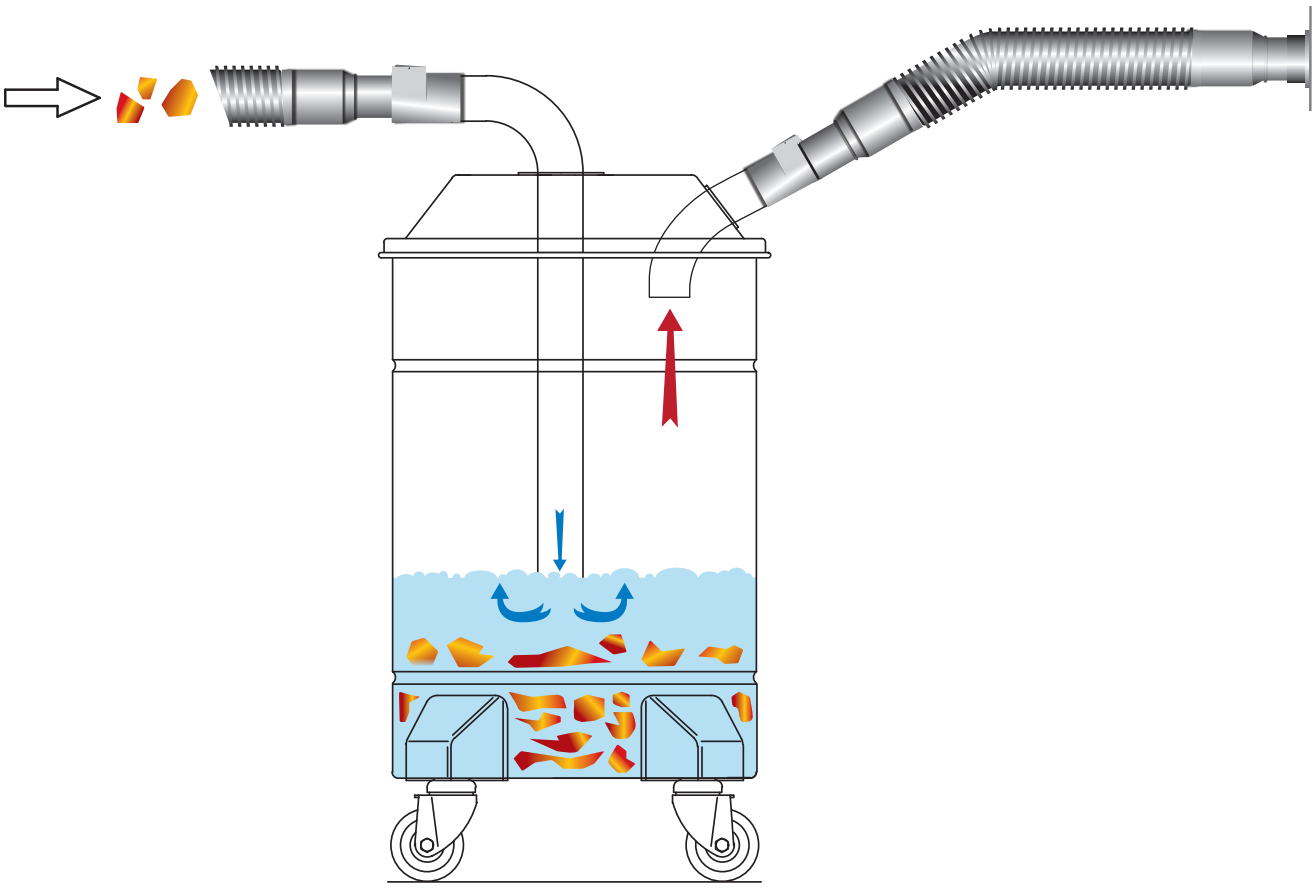

EXAMPLE 5

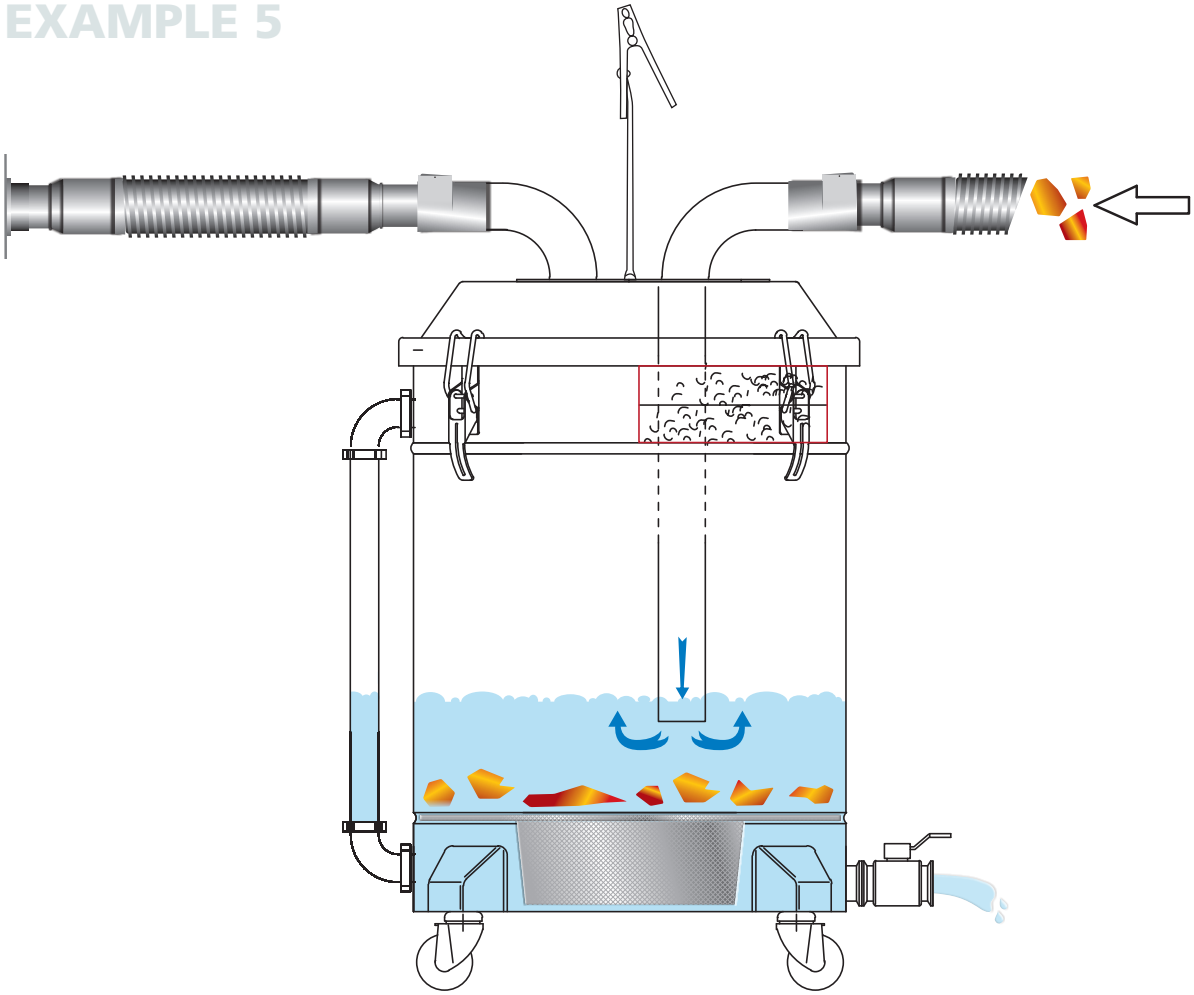

With cartridge kit

Ideal for vacuum cleaning and collecting dust and fine material where a high filtration level is required. The cartridge system provides full filtration of the material upstream of the vacuum cleaner. Generally used with medium-power machines.

CODE	**4072200435**	**ZS07AP22190**
Description	Separator Ø 460 with cartridge kit	Separator Ø 460 with cartridge kit
Diameter (mm)	460 mm	460 mm
Dimensions	770x660Xh1640	770x660Xh1640
Material	Brushed steel (White RAL 9003 painted trolley)	Painted iron White RAL 9003
Capacity (L)	60	60
Inlet Ø	70 mm on trolley 70 mm on filtering chamber with quick-fit fitting	70 mm on trolley 70 mm on filtering chamber with quick-fit fitting
Filter	Class M cartridge	Class M cartridge
Seal	Silicone	Silicone
Suitable for vacuuming	Dust	Dust
Recovery system	Cyclone effect	Cyclone effect
Connection	Ø 70 hose with sleeves on cap Hose fitting Ø 70 or reduction 70/50 on filtering chamber	Ø 70 hose with sleeves on cap Hose fitting Ø 70 or reduction 70/50 on filtering chamber
Wheels	Ø 150	Ø 150
Suitable for ATEX applications	**YES***	**NO**
Material unloading system	Removable container	Removable container with polyethylene bag
Electrical parts	YES (Electrical panel 24V)	YES (Electrical panel 24V)
Other features	-	Grill and depressor
Example	6	7

Note: compressed air supply is necessary

* ATEX - see the index page for specifications

EXAMPLE 6

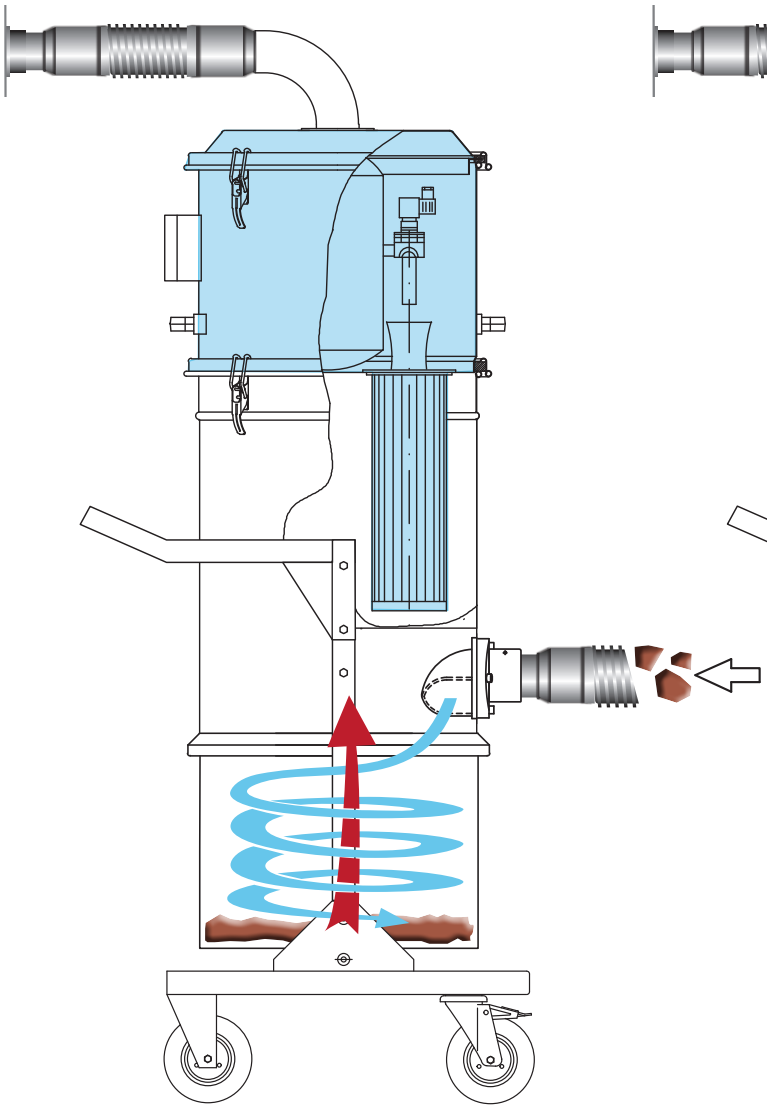

EXAMPLE 7

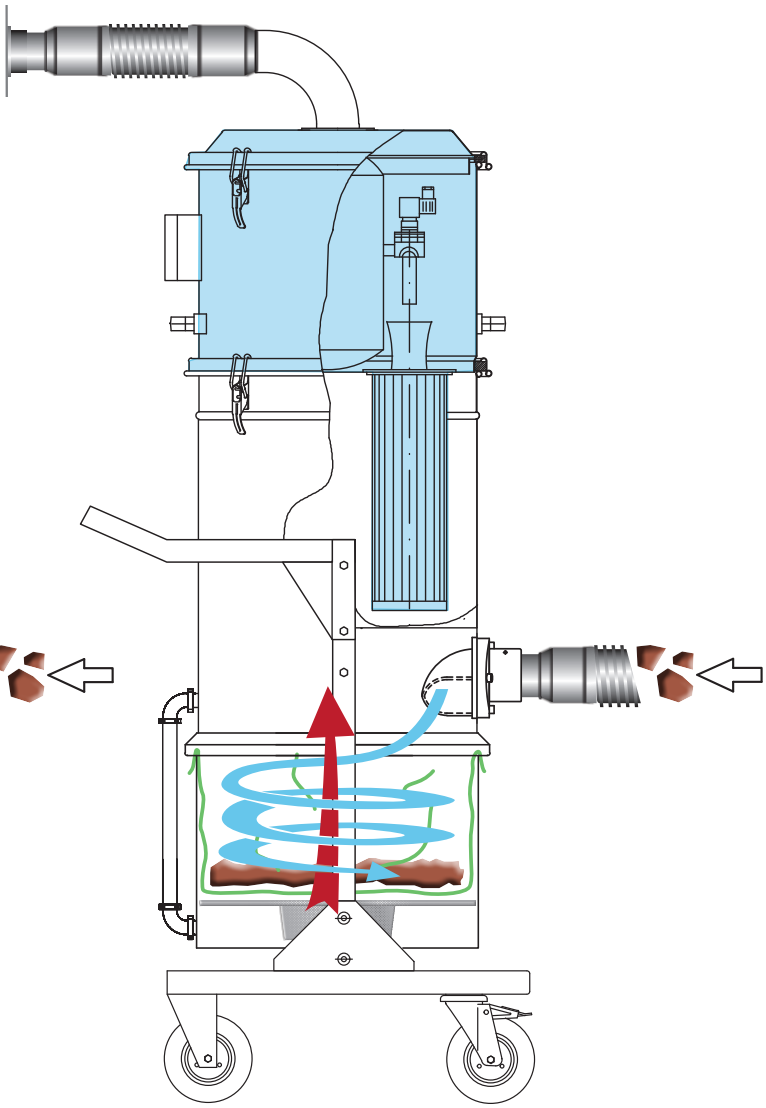

With Longopac® system

Ideal for vacuuming and bagging material cleaned up. The system lets you collect the material directly in polythene bags, which can be closed and disposed of. This system means the Operator can clean in total safety without having to come into contact with the vacuumed material. Generally used with medium-power machines.

CODE	**4072200497**
Description	Ø 460 separator with Longopac® system
Diameter (mm)	460 mm
Dimensions	770x660xH1790
Material	Painted iron Grey RAL 7001
Capacity (L)	-
Inlet Ø	100 mm with quick-fit system
Filter	No filter
Seal	EPDM bonded to the cap
Suitable for vacuuming	Dust Solids
Recovery system	Cyclone effect
Connection	Hose fitting Ø 100 or reduction 100/70
Wheels	Ø 150
Suitable for ATEX applications	**NO**
Material unloading system	With Longopac® bag
Electrical parts	NO
Other features	Gravity drain vacuum stop
Example	8

EXAMPLE 8

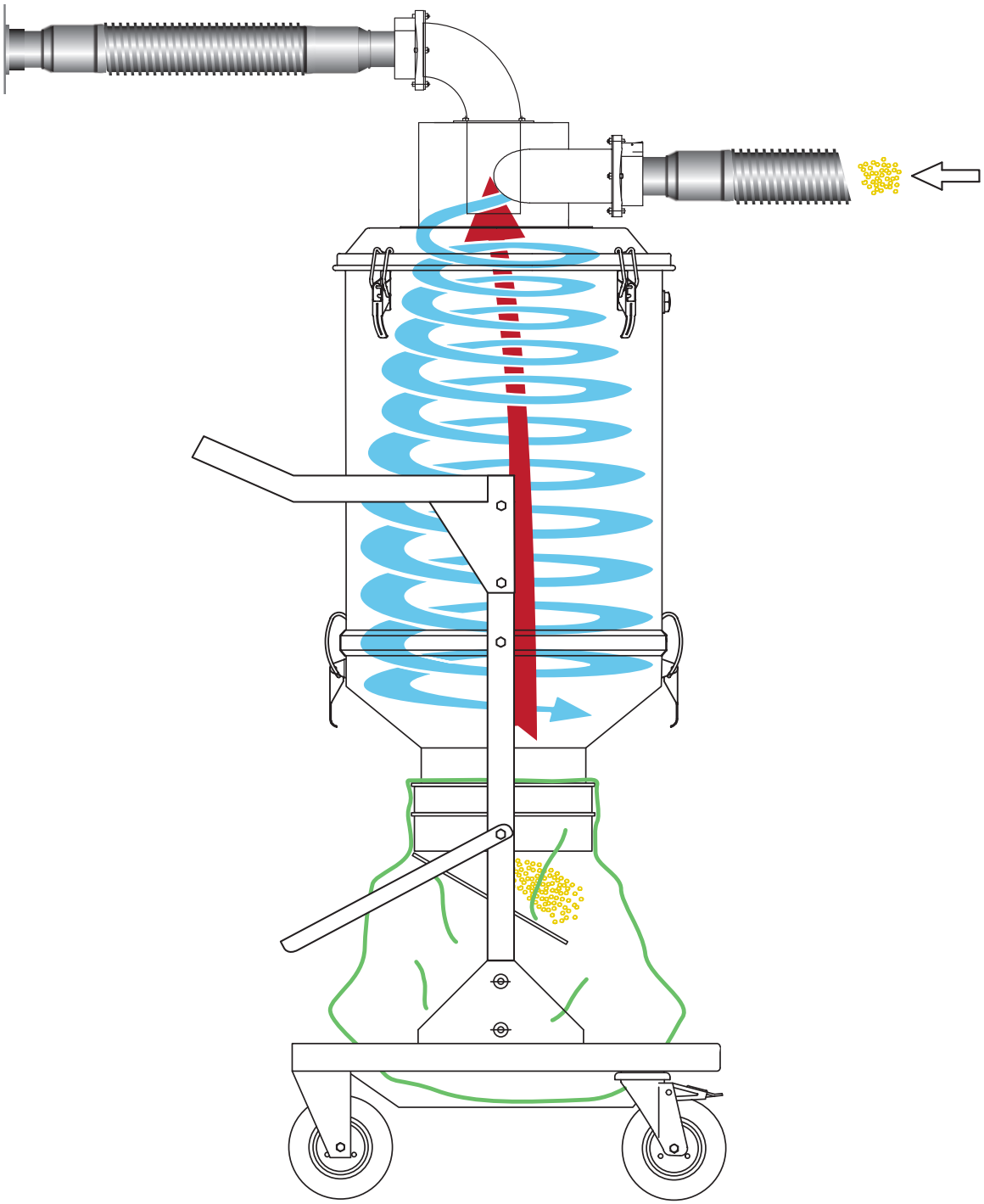

Special for liquids

Ideal for vacuuming and collecting liquids. Mechanical stop systems block the vacuum while the liquid is drained through manual valves. Grills inside the tank separate the debris or shavings from the liquid, which can then be drained. Various power settings can be used depending on the size, capacity and quantity of material to be vacuumed.

CODE	ZS07GE22153	ZS07BO22201	ZS07EC22142	Z7 22342 L
Description	Ø 560 L175 separator for liquids	Ø 460 L100 separator with mechanical stop system	Tilting separator L400	Tilting separator L1000
Diameter (mm)	560 mm	460 mm	-	-
Dimensions	620x620xH1030	490x490xH880	1350x1050xH1600	1300x1300xH1500
Material	Brushed steel	Brushed steel	Painted iron Orange RAL 2004	Painted iron Yellow RAL 1003
Capacity (L)	175	100	400	1000
Inlet Ø	100 mm	50 mm	100 mm with quick-fit system	100 mm with quick-fit system
Filter	No filter	No filter	No filter	No filter
Seal	Silicone	Silicone	EPDM bonded to door	EPDM bonded to door
Suitable for vacuuming	Liquids	Liquids	Liquids	Liquids
Recovery system	Gravity	Gravity	Cyclone effect	Cyclone effect
Connection	Ø 100 hose with sleeves	Ø 50 hose with sleeves	Hose fitting Ø 100 or reduction 100/70-100/50	Hose fitting Ø 100 or reduction 100/70-100/50
Wheels	Ø 80	Ø 80	Ø 200	Ø 200
Suitable for ATEX applications	**YES***	**YES***	**NO**	**NO**
Material unloading system	Manual or with ball valve	Manual or with ball valve	Tilted with forklift or manual with ball valve	Tilted with forklift
Electrical parts	NO	NO	NO	NO
Other features	Valve grill	Valve grill, external indicator level control, mechanical stop, cable for ground connection	Inside grill and manual valve	Mechanical stop system
Example	9	10	11	12

* ATEX - see the index page for specifications

EXAMPLE 9

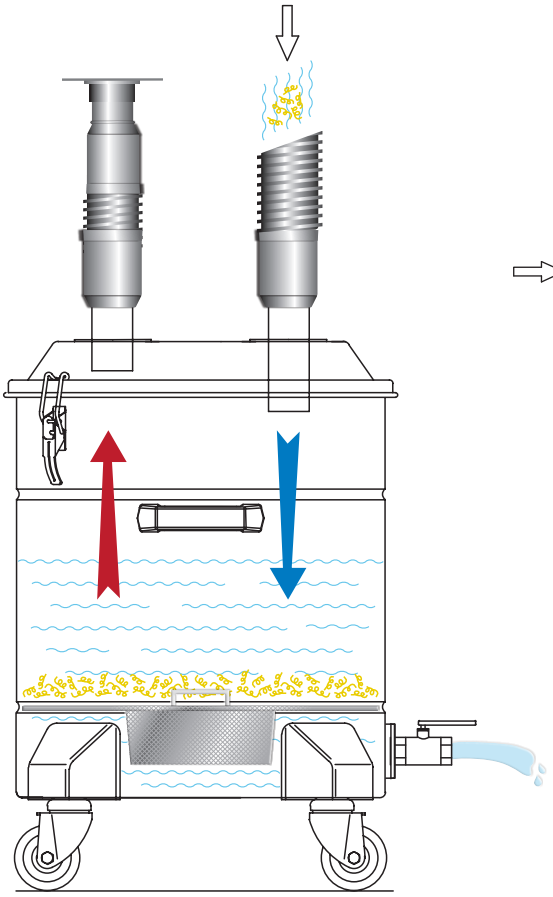

EXAMPLE 10

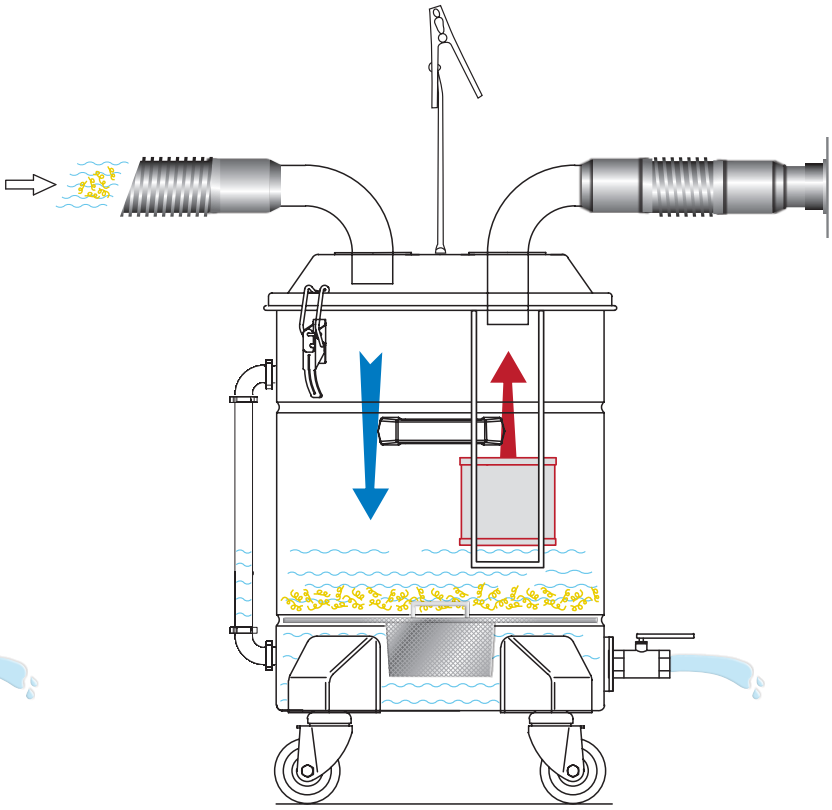

EXAMPLE 11

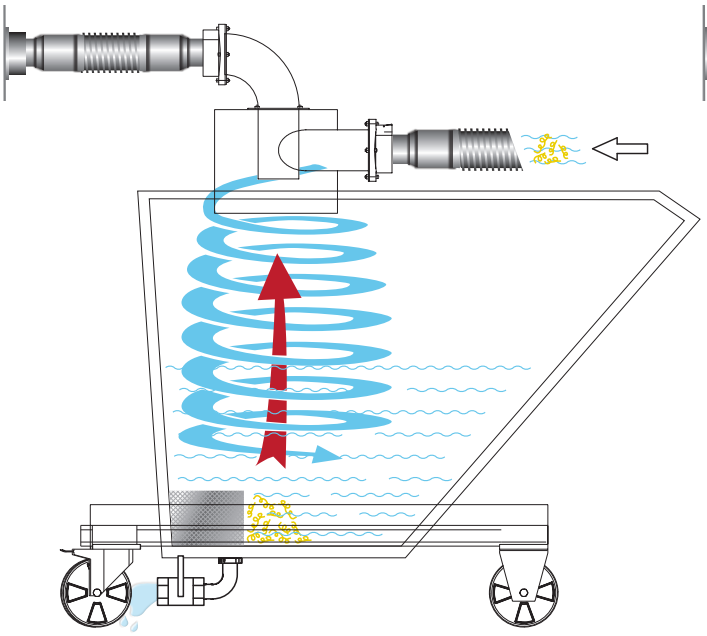

EXAMPLE 12

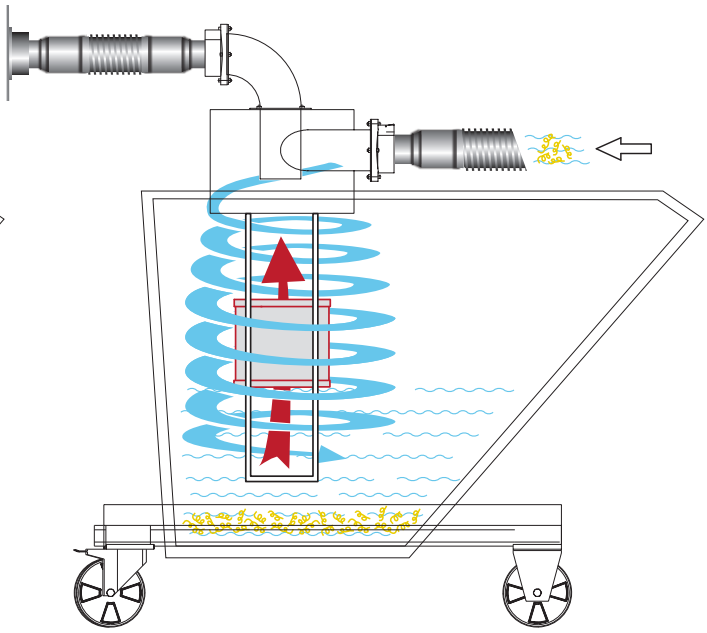

Trolley-mounted

Ideal for vacuuming material in systems that are frequently moved. Ideal for applications where the material must be unloaded on the ground (belts or containers) using manual valves or a tilting system at the end of the vacuuming cycle. Generally used with medium or high power machines.

CODE	ZS07DA22050	ZS07AP22144	ZS07DA22112	ZS07GE22090	ZS07GE22127	Z8 36404	ZS07EC22064
Description	Trolley-mounted Ø 460 separator	Ø 460 separator with tilting discharge device	Trolley-mounted Ø 460 separator	Ø 460 separator with tilting discharge device	Trolley-mounted Ø 560 separator	Trolley-mounted Ø 560 separator	Ø 780 separator
Diameter (mm)	460 mm	460 mm	460 mm	460 mm	560 mm	560 mm	780 mm
Dimensions	770x660XH1490	770x660XH1490	770x660XH1490	1300x800XH2200	1300x800XH2500	1300x800XH2500	1300x800XH1930
Material	Painted iron Grey RAL 7001	Painted iron Grey RAL 7001	Brushed steel	Painted iron Grey RAL 7001	Painted iron Grey RAL 7001	Painted iron Grey RAL 7001	Painted iron Grey RAL 7001
Capacity (L)	100	20	100	20	38	100	550
Inlet Ø	50 mm on cap 70 mm on filtering chamber with quick-fit fitting	70 mm on cap 70 mm on filtering chamber with quick-fit fitting	50 mm on cap 70 mm on filtering chamber with quick-fit fitting	70 mm on cap 70 mm on filtering chamber with quick-fit fitting	100 mm with quick-fit system	100 mm with quick-fit system	100 mm with quick-fit system on cap 100 mm on container
Filter	Category L star filter	Category L star filter	Category L star filter	Category L star filter	No filter	No filter	Polyester bag filter
Seal	SBR	SBR	Silicone	SBR	SBR	SBR	SBR
Suitable for vacuuming	Dust Solids	Dust Solids	Dust Solids	Dust Solids	Dust Solids	Dust Solids	Scraps Solids
Recovery system	Cyclone effect	Cyclone effect	Cyclone effect	Cyclone effect	Cyclone effect	Cyclone effect	Gravity
Connection	Ø 50 hose with sleeves on cap Hose fitting Ø 70 or reduction 70/50 on filtering chamber	Ø 50 hose with sleeves on cap Hose fitting Ø 70 or reduction 70/50 on filtering chamber	Ø 50 hose with sleeves on cap Hose fitting Ø 70 or reduction 70/50 on filtering chamber	Ø 70 hose with sleeves on cap Hose fitting Ø 70 or reduction 70/50 on filtering chamber	Hose fitting Ø 100 or reduction 100/70-100/50	Hose fitting Ø 100 or reduction 100/70-100/50	Hose with sleeve on container Hose fitting Ø 100 or reduction 100/70 on cap
Wheels	Ø 150	Ø 150	Ø 150	Ø 200	Ø 200	Ø 150	Ø 200
Suitable for ATEX applications	**NO**	**NO**	**NO**	**NO**	**NO**	**NO**	**NO**
Material unloading system	Removable container	Gravitational	Removable container	Gravitational	Gravitational	Slide valve Ø 250	BigBag to be removed with forklift
Electrical parts	NO	NO	NO	NO	NO	NO	NO
Other features	Manual filter shaker	Manual filter shaker	Manual filter shaker	Assembled on trolley	Assembled on trolley	Assembled on trolley + Ø 150 carry bag system	Tilting cap
Example	13	14	13	14	15	16	17

EXAMPLE 13

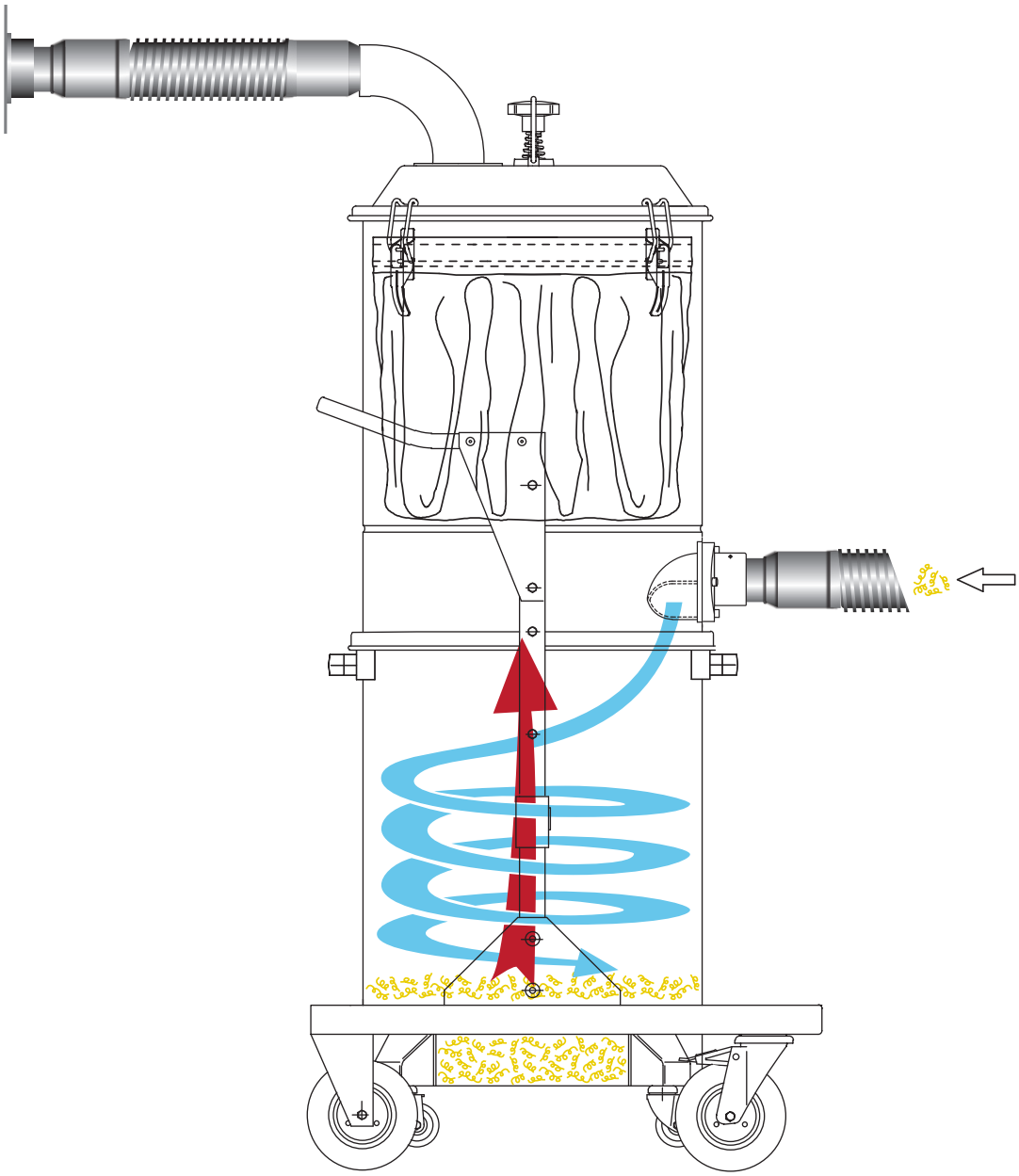

EXAMPLE 14

EXAMPLE 15

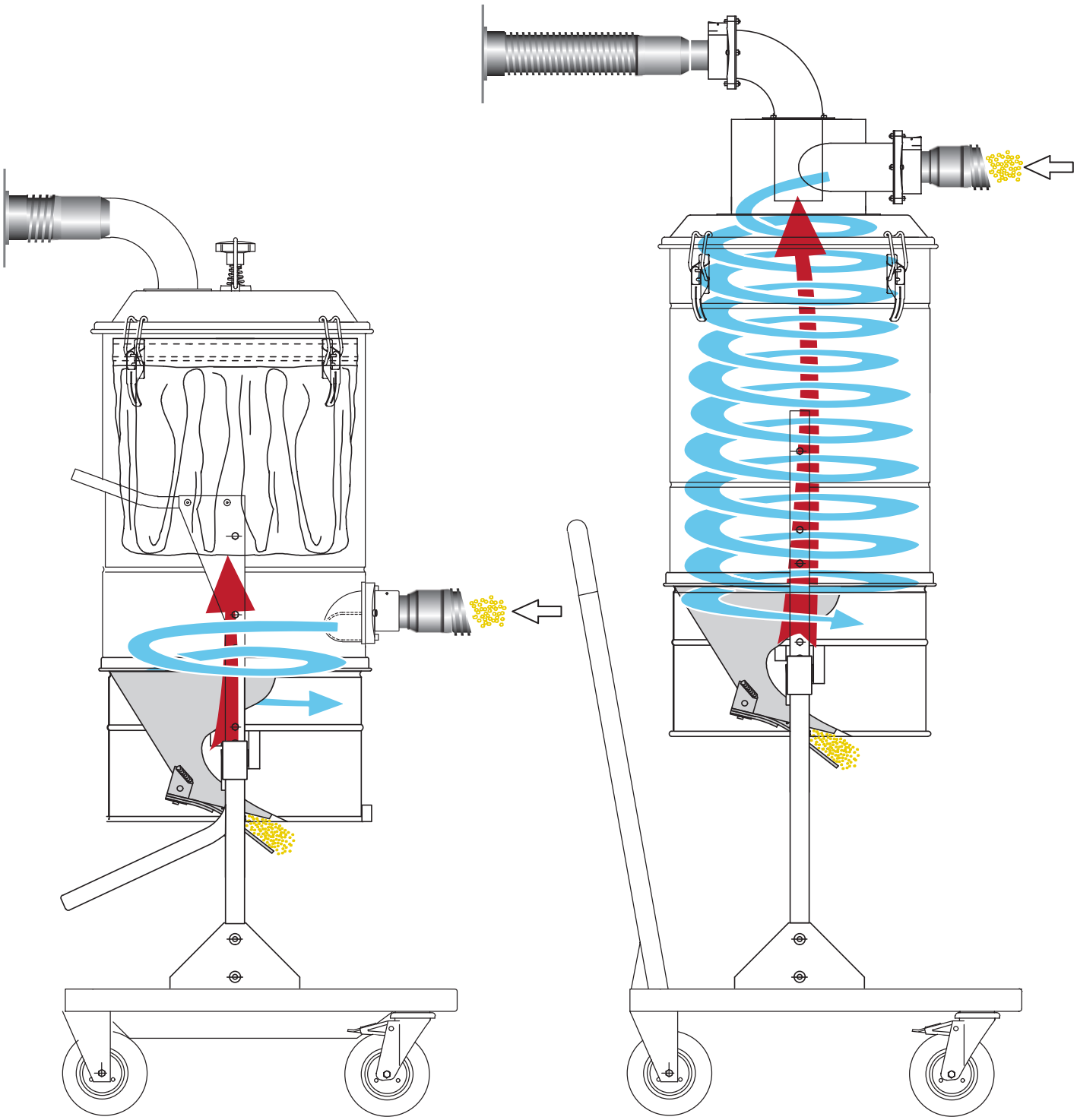

EXAMPLE 16

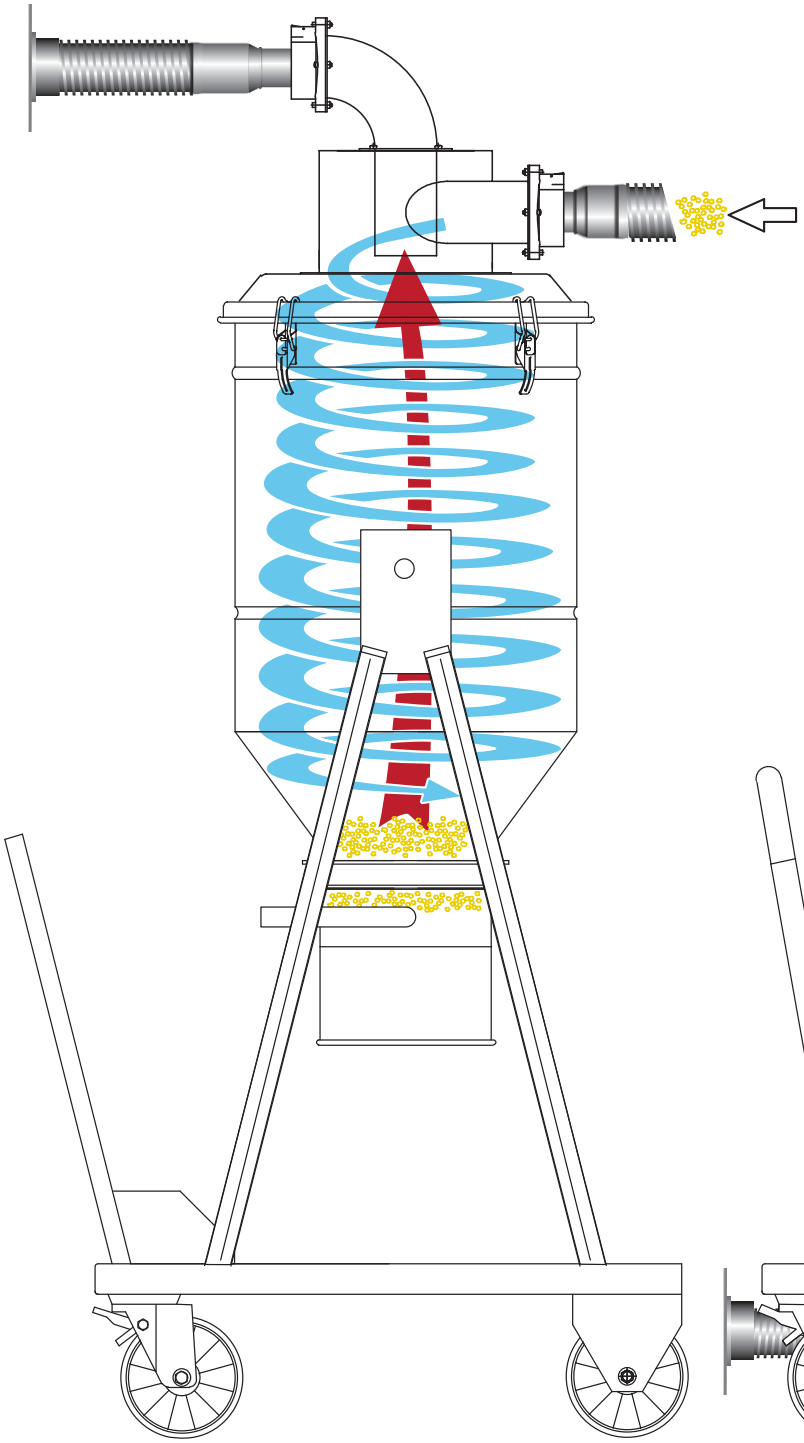

EXAMPLE 17

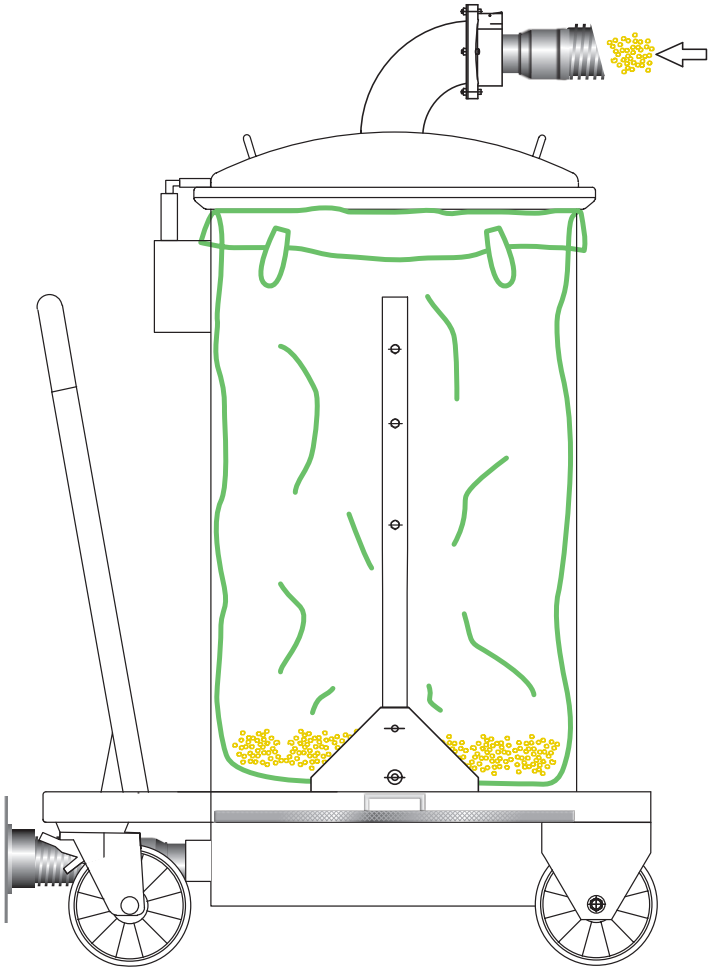

Tilting system

Ideal for vacuuming and collecting large amounts of material. It prevents the vacuum cleaner container filling too often, with frequent interruptions in the work cycle. Easy to move with a forklift and easy to empty. Generally used with medium or high power machines.

CODE	ZS07GE22042	ZS07BO22208	Z7 22158	Z7 22158X	4072200493
Description	Ø 560 tilting separator	Ø 560 tilting separator	Tilting 400 L container	Tilting stainless steel 400 L container	Tilting Z22 400 L container
Diameter (mm)	560 mm	560 mm	-	-	-
Dimensions	1100x900xH1850	1100x900xH1620	1350x1050xH1600	1350x1050xH1600	1350x1050xH1600
Material	Painted iron Grey RAL 7001	Painted iron Grey RAL 7001	Painted iron Orange RAL 2004	Brushed steel	Painted iron Orange RAL 2004
Capacity (L)	200	200	400	400	400
Inlet Ø	-	-	100 mm with quick-fit system	100 mm with quick-fit system	100 mm with quick-fit system
Filter	No filter	No filter	No filter	No filter	No filter
Seal	-	SBR	EPDM bonded to door	EPDM bonded to door	EPDM bonded to door
Suitable for vacuuming	Dust Liquids Solids	Dust Liquids Solids	Dust Liquids Solids	Dust Liquids Solids	Dust Solids
Recovery system	-	Gravity	Cyclone effect	Cyclone effect	Cyclone effect
Connection	-	Hose fitting Ø 70 or reduction 70/50	Hose fitting Ø 100 or reduction 100/70-100/50	Hose fitting Ø 100 or reduction 100/70-100/50	Hose fitting Ø 100 or reduction 100/70-100/50
Wheels	Ø 200	Ø 200	Ø 200	Ø 200	Ø 200
Suitable for ATEX applications	**NO**	**NO**	**NO**	**NO**	**YES***
Material unloading system	Tilted manually	Tilted manually or with ball valve	Tilted with forklift	Tilted with forklift	Tilted with forklift
Electrical parts	NO	NO	NO	NO	NO
Other features	Trolley-mounted (separator or mini-separator cap sold separately)	Trolley-mounted, grill and valve, system for hot substances	-	-	Stainless steel mini-separator, cable with ground clamp
Example	18	19	20	20	20

* ATEX - see the index page for specifications

EXAMPLE 18

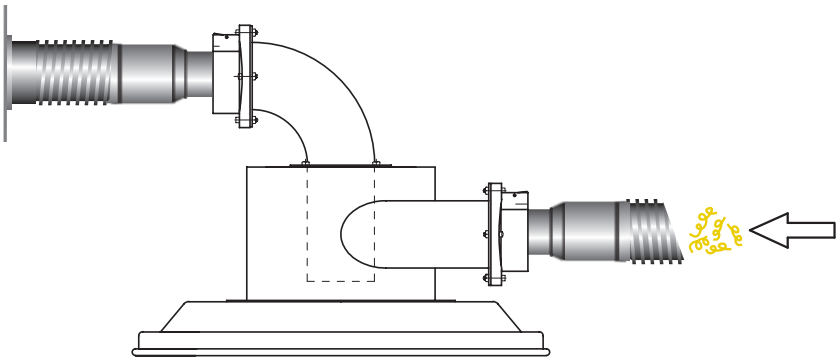

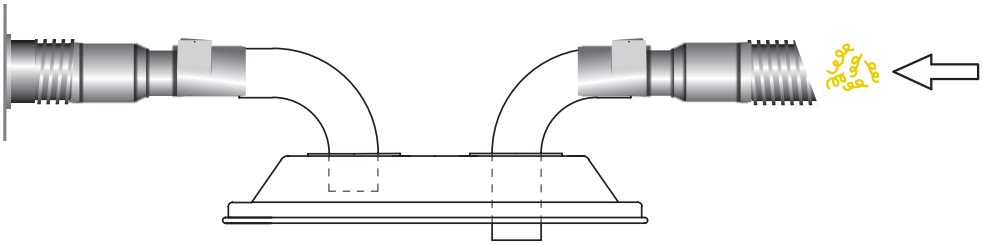

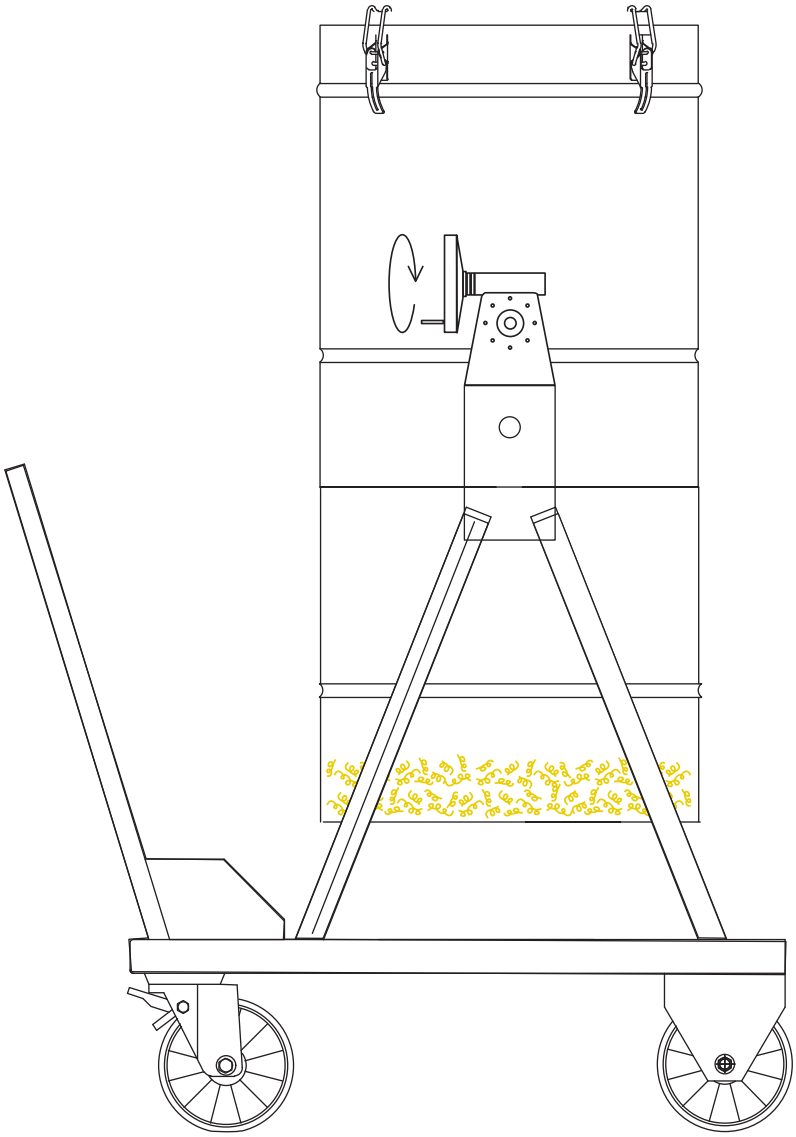

EXAMPLE 19

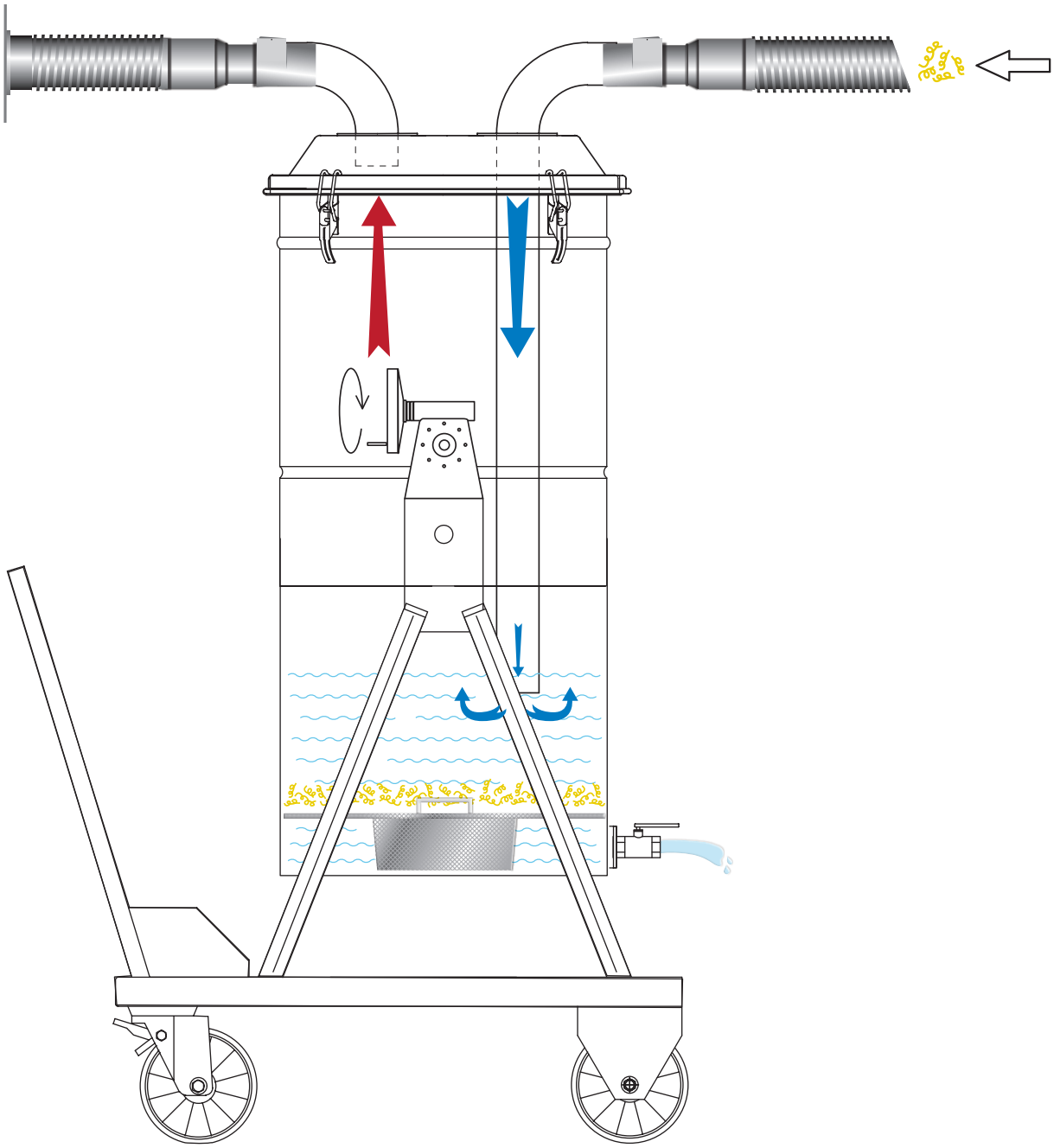

EXAMPLE 20

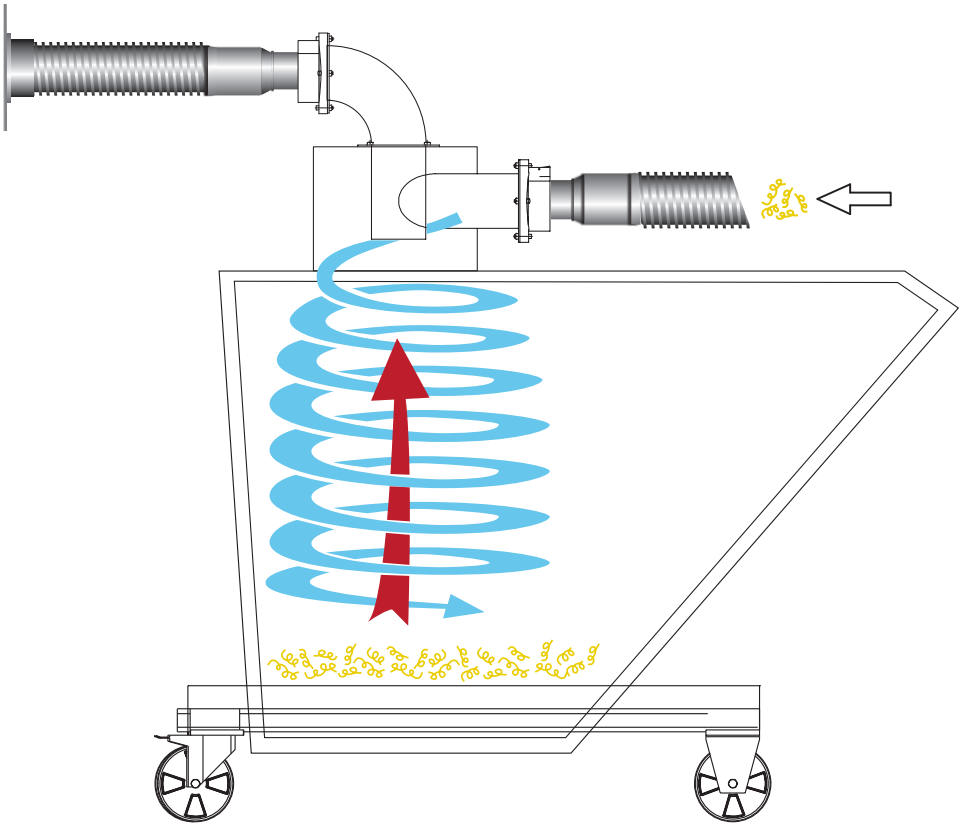

Outlet on bottom L 1000

Ideal for vacuuming and collecting large quantities of material without frequently filling the vacuum cleaner container. Generally used with high power outputs. Easy to empty and move with a forklift.

CODE	**4072200415**
Description	1000 L separator with bottom outlet
Diameter (mm)	-
Dimensions	1300x1300xH1500
Material	Painted iron Yellow RAL 1003
Capacity (L)	1000
Inlet Ø	100 mm with quick-fit system
Filter	No filter
Seal	EPDM bonded to door
Suitable for vacuuming	Dust Solids
Recovery system	Cyclone effect
Connection	Hose fitting Ø 100 or reduction 100/70
Wheels	No
Suitable for ATEX applications	**NO**
Material unloading system	Bottom outlet
Electrical parts	NO
Other features	Can only be moved with a forklift
Example	21

EXAMPLE 21

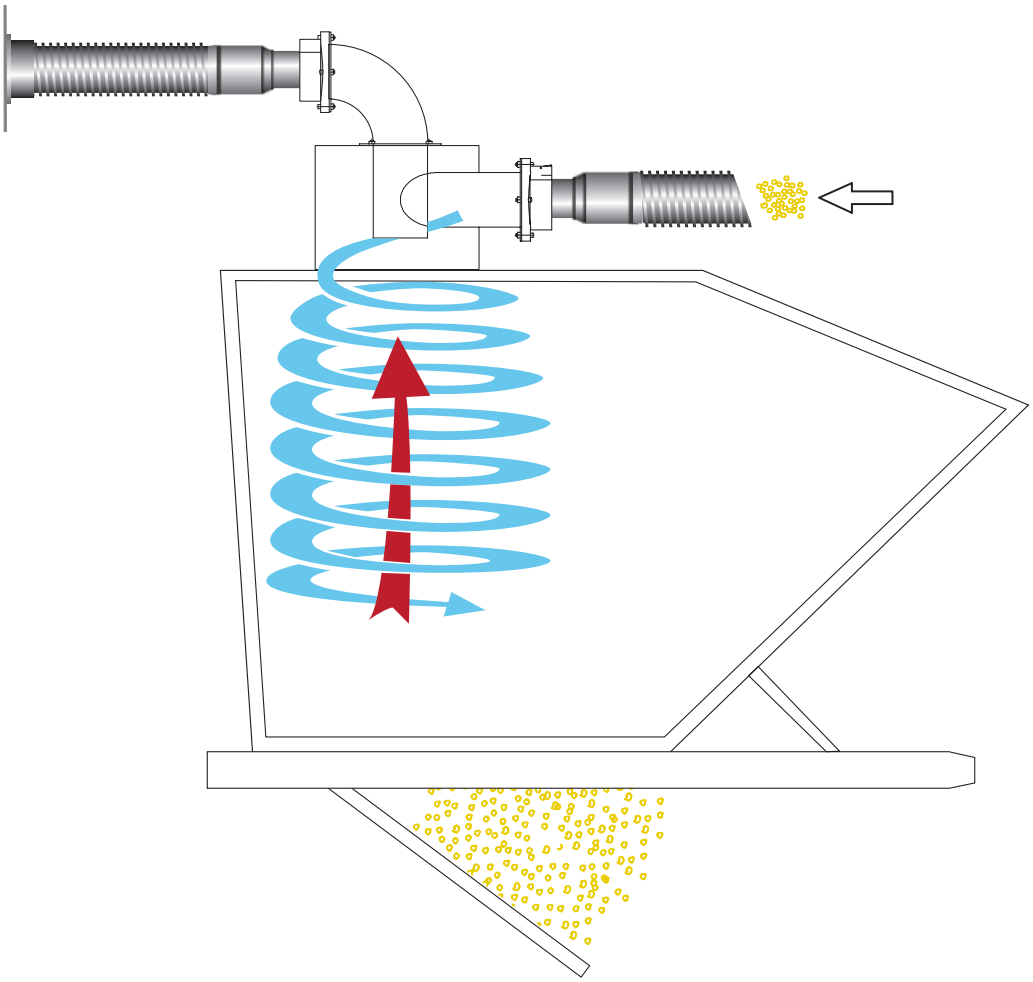

R models for scraps

Ideal for vacuuming and collecting waste from packaging processes. Normally used with R models for duplicate waste collection in nylon bags to avoid interruptions in the work cycle.

CODE	4072200402	4072200432	ZS07BA22005	ZS07HE22114	ZS07AP22160
Description	Separator Ø 560	Separator Ø 560	Separator Ø 560	Separator Ø 560	Separator Ø 560
Diameter (mm)	560 mm	560 mm	560 mm	560 mm	560 mm
Dimensions	560x560xH1250	560x5600xH1250	560x560xH1250	560x560xH1250	560x560xH1250
Material	Painted iron White RAL 9003	Brushed steel	Painted iron White RAL 9003	Brushed steel	Painted iron White RAL 9003
Capacity (L)	200	200	200	200	200
Inlet Ø	50 mm on cap 70 mm on filtering chamber	50 mm on cap 70 mm on filtering chamber	70 mm on cap 100 mm on filtering chamber	100 mm on cap 100 mm on filtering chamber	100 mm on cap 100 mm on filtering chamber
Filter	Nylon	Nylon	Polyester bag	Nylon	Nylon
Seal	EPDM bonded to the cap	EPDM bonded to the cap	EPDM bonded to the cap	EPDM bonded to the cap	EPDM bonded to the cap
Suitable for vacuuming	Scraps Solids	Scraps Solids	Scraps Solids	Scraps Solids	Scraps Solids
Recovery system	Gravity	Gravity	Gravity	Gravity	Gravity
Connection	Ø 70 hose with sleeve on container, Ø 50 hose with sleeve on cap	Ø 70 hose with sleeve on container, Ø 50 hose with sleeve on cap	Ø 100 hose with sleeve on container, Ø 70 hose with sleeve on cap	Ø 100 hose with sleeve on container, Ø 100 hose with sleeve on cap	Ø 100 hose with sleeve on container, Ø 100 hose with sleeve on cap
Wheels	Ø 100	Ø 100	Ø 60	Ø 100	Ø 100
Suitable for ATEX applications	**NO**	**NO**	**NO**	**NO**	**NO**
Material unloading system	Manual	Manual	Manual	Manual	Manual
Electrical parts	NO	NO	NO	NO	NO
Other features	Grill on the bottom	Grill on the bottom	Grill on the bottom	Grill on the bottom	Mesh container, hinged cap
Example	22	22	22	22	23

EXAMPLE 22

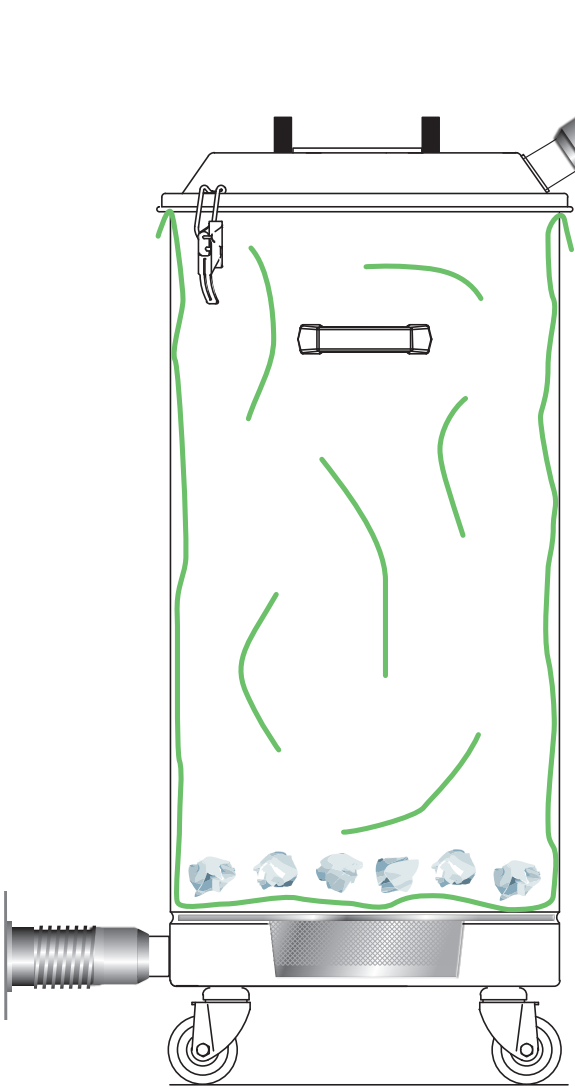

EXAMPLE 23

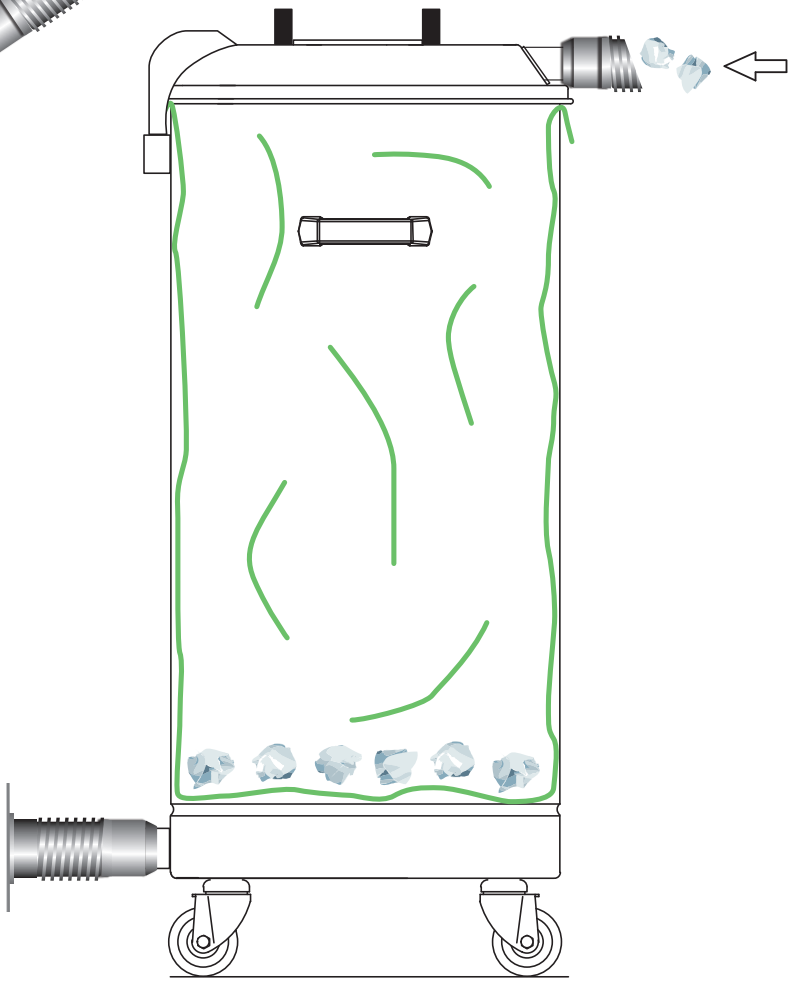

With antistatic bag

Ideal for vacuuming and collecting dust or solids in an antistatic polyethylene bag. The technical characteristics of the machine make it suitable for use in Atex zones.

CODE	**4072200416**
Description	175 L Ø 560 separator for Z22
Diameter (mm)	560 mm
Dimensions	620x620xH1030
Material	Brushed steel
Capacity (L)	175
Inlet Ø	70 mm with quick-fit system
Filter	No filter
Seal	EPDM bonded to the cap
Suitable for vacuuming	Dust Solids
Recovery system	Gravity
Connection	Ø 70 hose fitting or reduction 70/50
Wheels	Ø 100
Suitable for ATEX applications	**YES***
Material unloading system	Manual
Electrical parts	NO
Other features	Depressor grill with anti-static bag
Example	24

* ATEX - see the index page for specifications

EXAMPLE 24

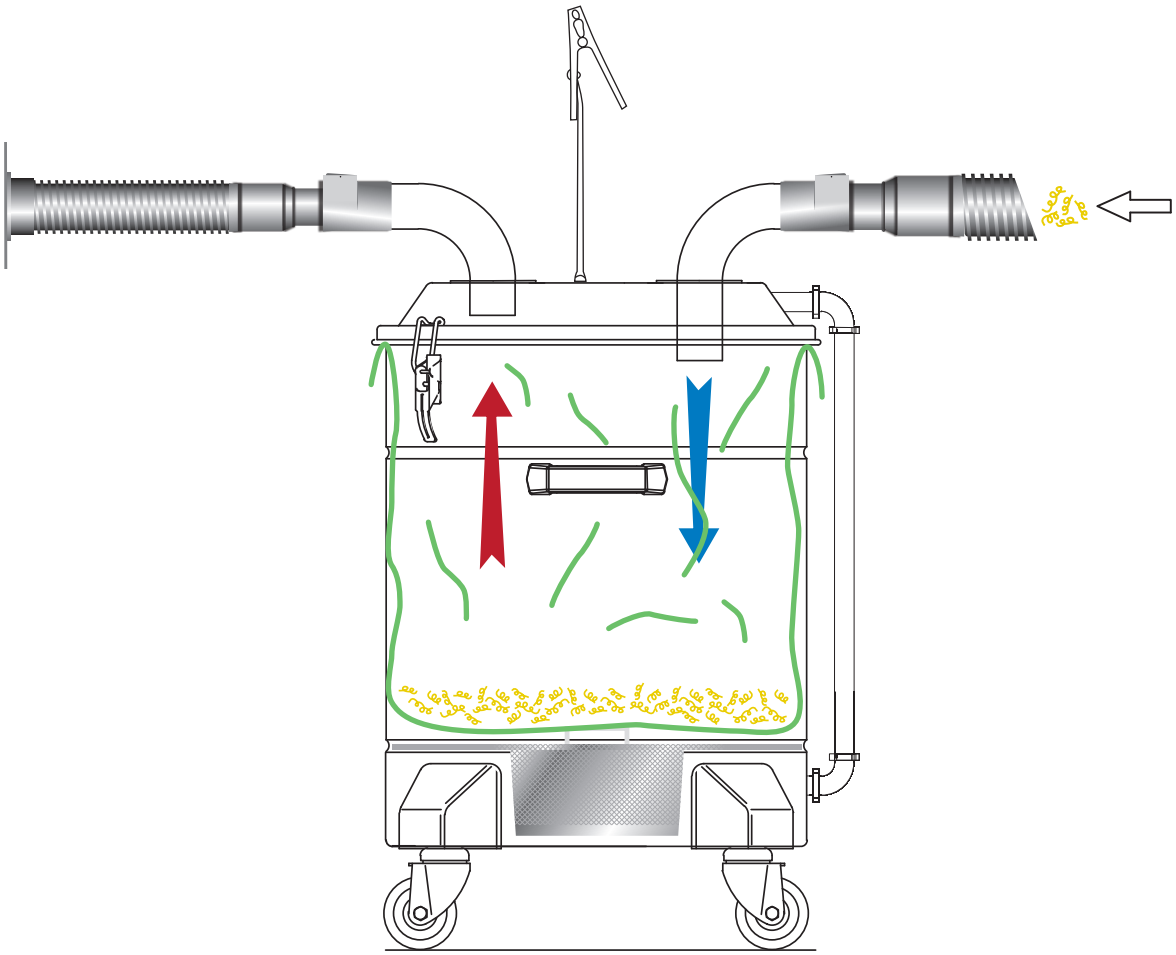

WITH ANTISTATIC BAG

Notes

Data, technical characteristics, colors and illustrations can be subject to change without prior notice © 2016

Nilfisk Danmark A/S
Tlf. 43 23 40 50 / 72 18 21 20
www.nilfisk.dk